PRODUCT MANUAL

Twin Wall Aluminum Frame Greenhouse

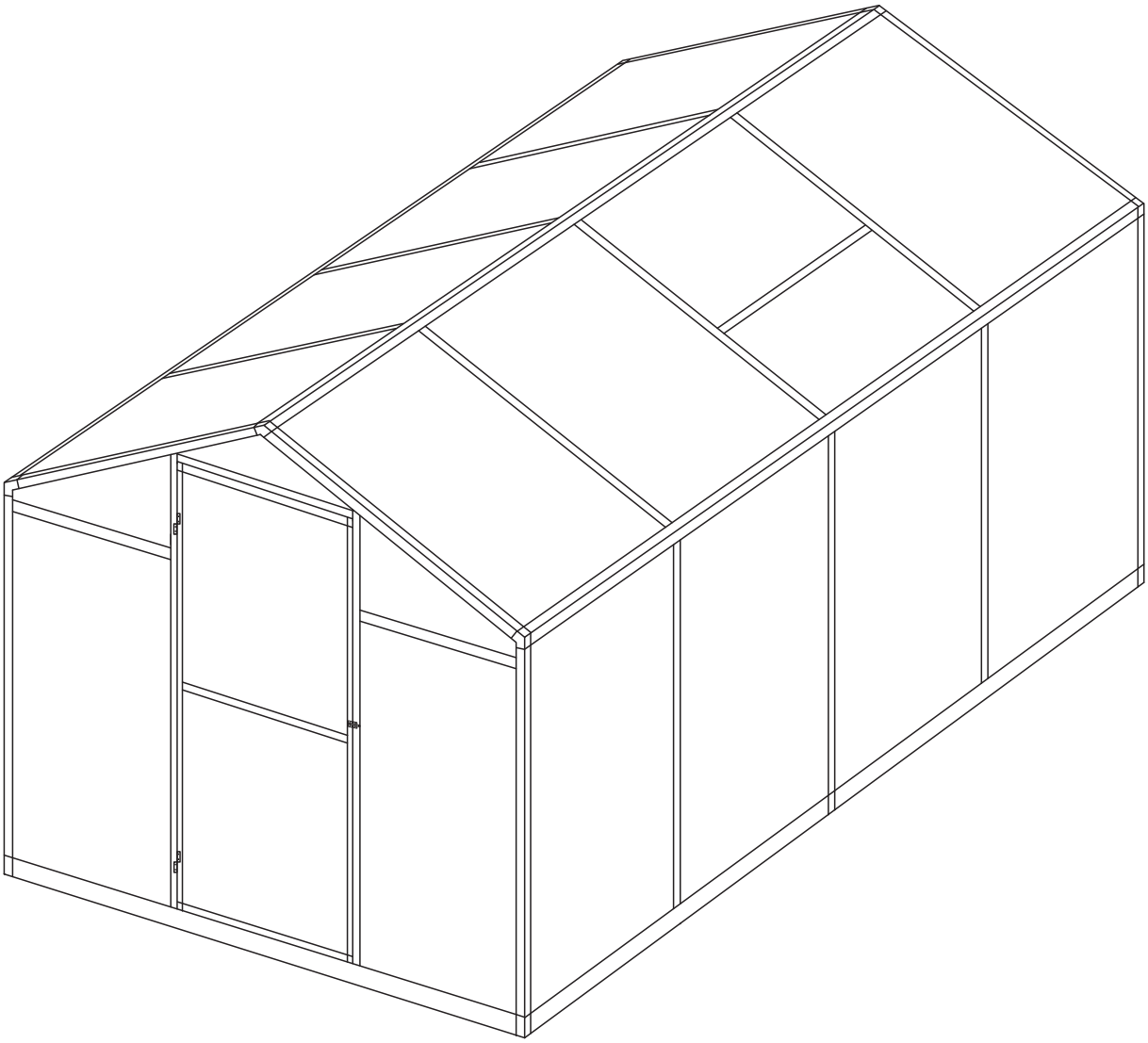

Aluminum Parts:

No.	Picture	Qty.	Size	No.	Picture	Qty.	Size
1	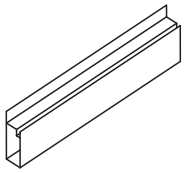	2	119.2	11	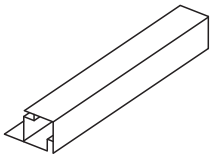	1	95.6
2	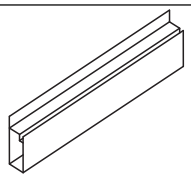	2	119.2	12	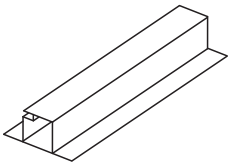	1	164.3
3	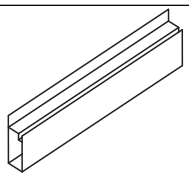	1	172	13	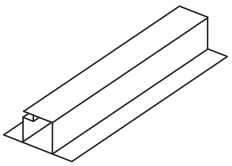	1	164.3
4	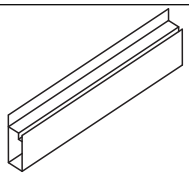	1	172	14	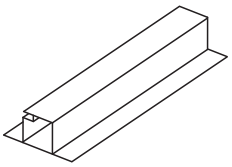	1	165.8
5A	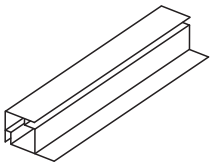	2	130.3	15	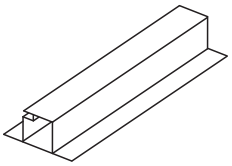	1	165.8
5B	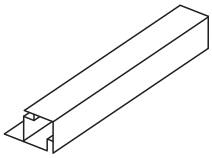	2	130.3	16	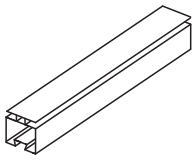	6	130.3
6	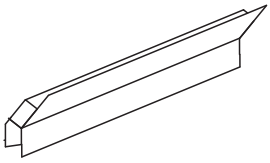	4	119.2	17	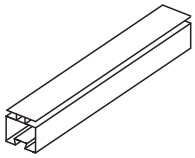	3	96.5
8	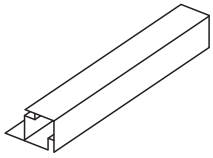	1	95.6	17A	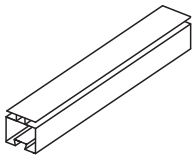	1	96.9
9	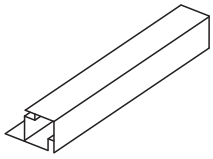	1	95.6	18A	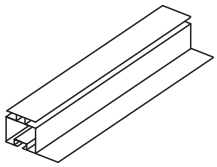	1	96.5
10	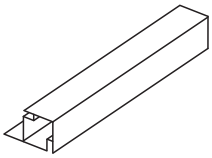	1	95.6	18B	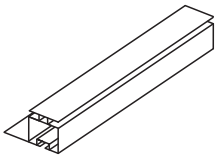	1	96.5

No.	Picture	Qty.	Size	No.	Picture	Qty.	Size
19	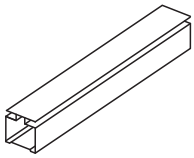	2	51.7	28	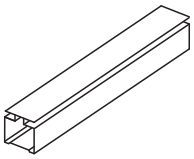	1	56.3
20	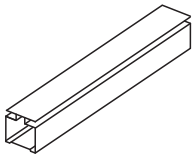	2	54.6	30A	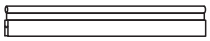	1	60
21	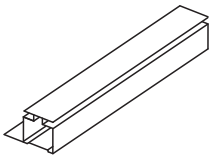	1	63	30B	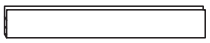	1	60
22	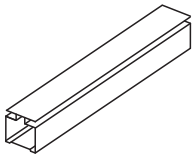	1	57	30C		2	60.4
23	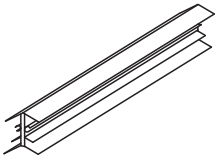	2	120.6	31A	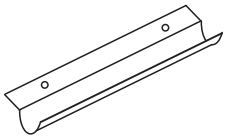	2	120.6
24	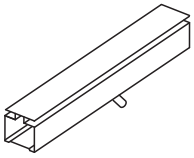	1	58.2	31B	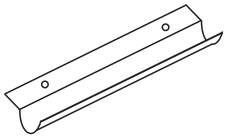	2	120.6
25	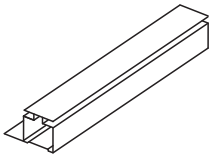	1	155				
26	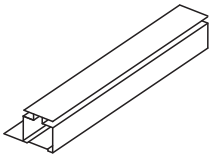	1	155				
27	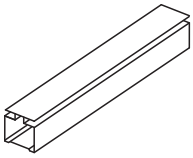	2	56.3				

Plastic Parts:

No.	Picture	Qty.	Size	No.	Picture	Qty.	Size
32		4		35A	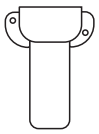	2	
33A	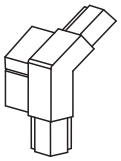	2		35B	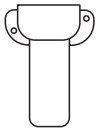	2	
33B	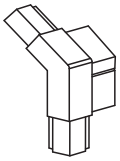	2		38		2	
34	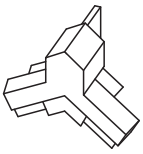	2		39		2	

Hardware：

No.	Picture	Qty.	Size	No.	Picture	Qty.	Size
37		4	M6∗7	46		7	26. 6
40		4	M4∗12	47		4	100
41		34	M6∗9	48		2	
42		78	M6∗12	49		2	
43		8	M4∗8	50		1	
44		4	M6∗26	51		2	
45		2	M6∗35				

Twin PC Board:

No.	Picture	Qty.	Size	No.	Picture	Qty.	Size
A	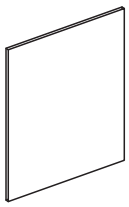	8	133.5*60.2	G	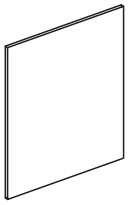	2	129.5*53.5
B	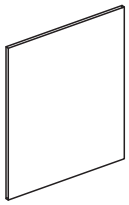	7	98.8*60.2	H	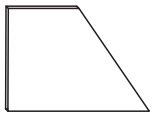	2	34.5*53.5
C	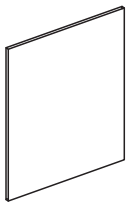	2	129.5*56.5	I	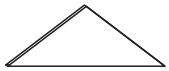	1	19.7*63
D	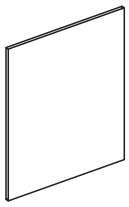	1	129.5*58.8	J	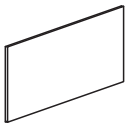	1	60.2*37.5
E	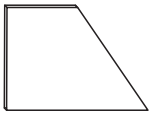	2	36*56.5	K	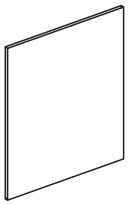	2	77.5*57.9
F	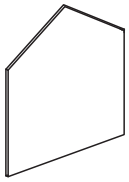	1	54*58.8	L	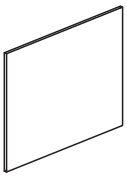	1	57*60

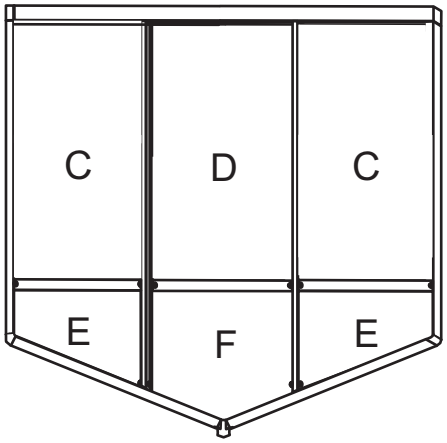

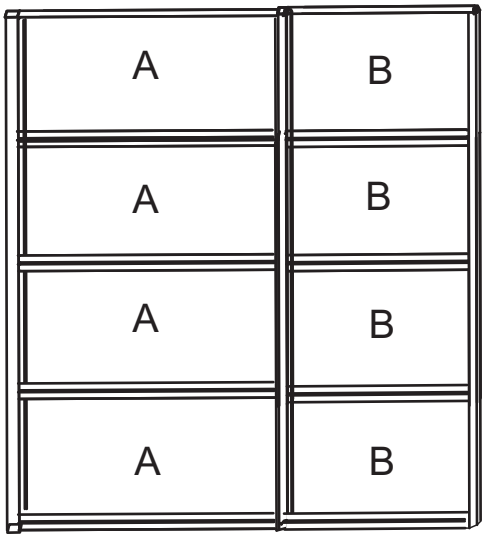

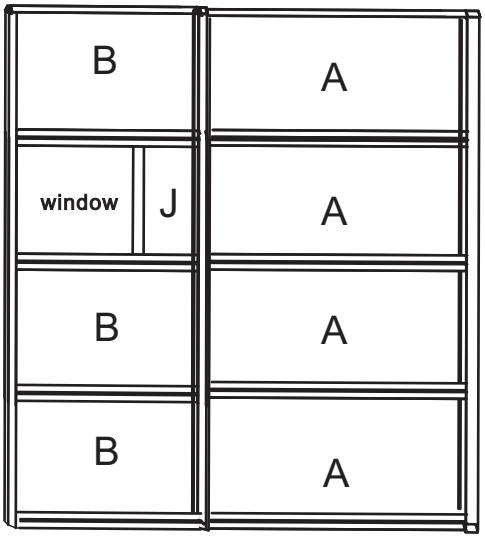

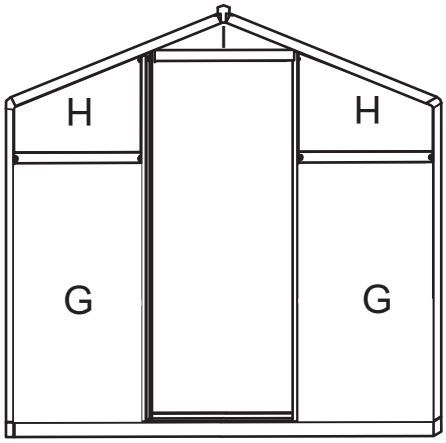

The white film faces outwards if applicable.

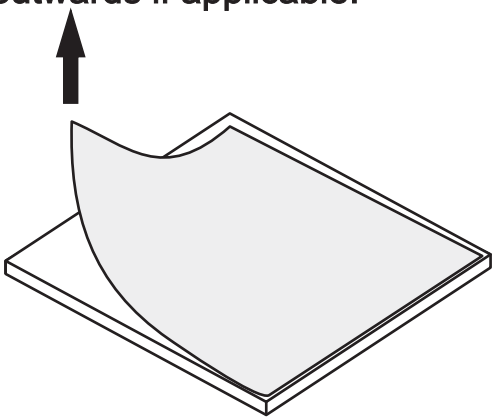

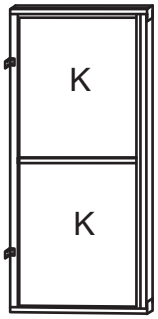

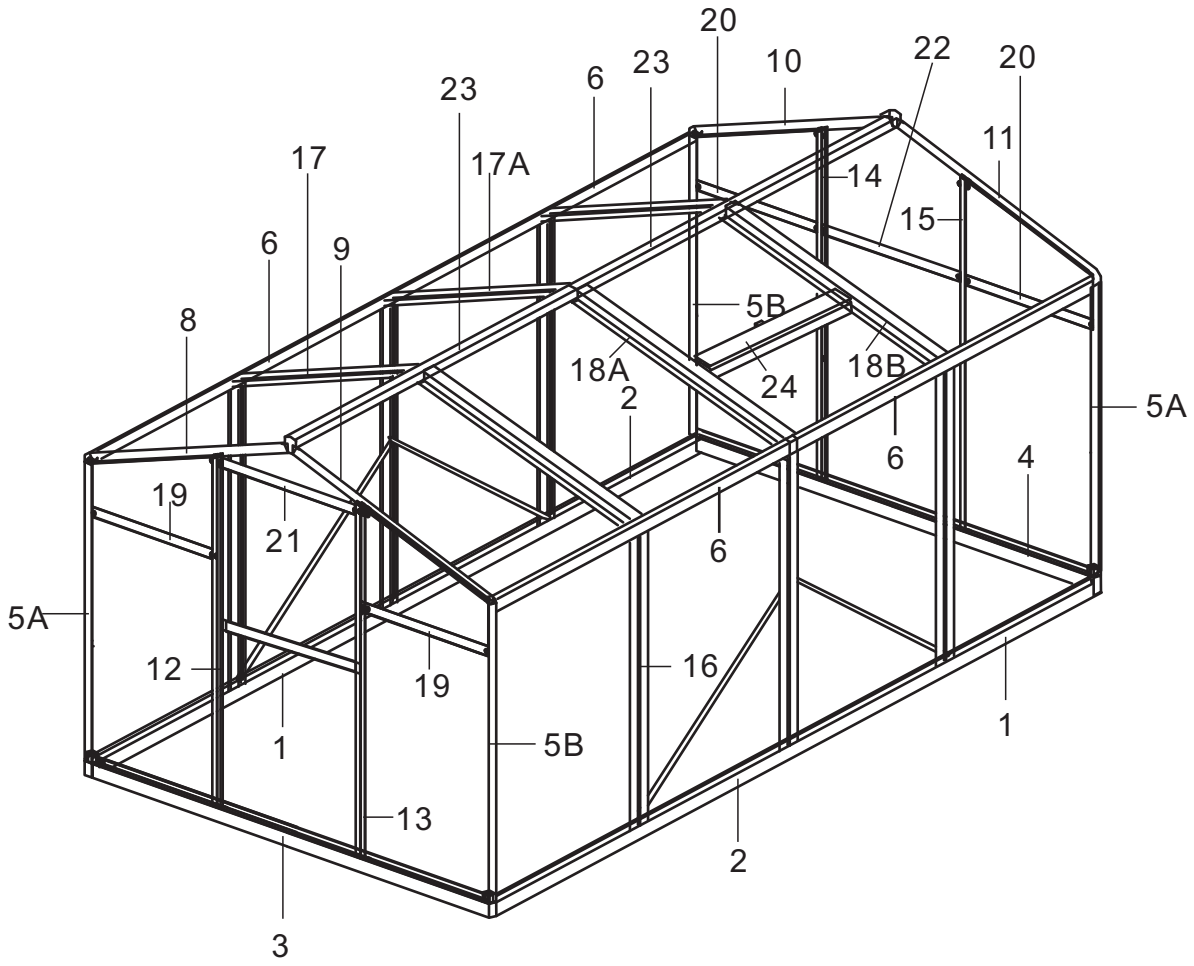
20
22
20
10
23
6
23
11
17
17A
14
15
6
9
5B
8
18A
24
18B
2
5A
6
4
19
21
6
5A
12
19
16
1
5B
1
13
2
3

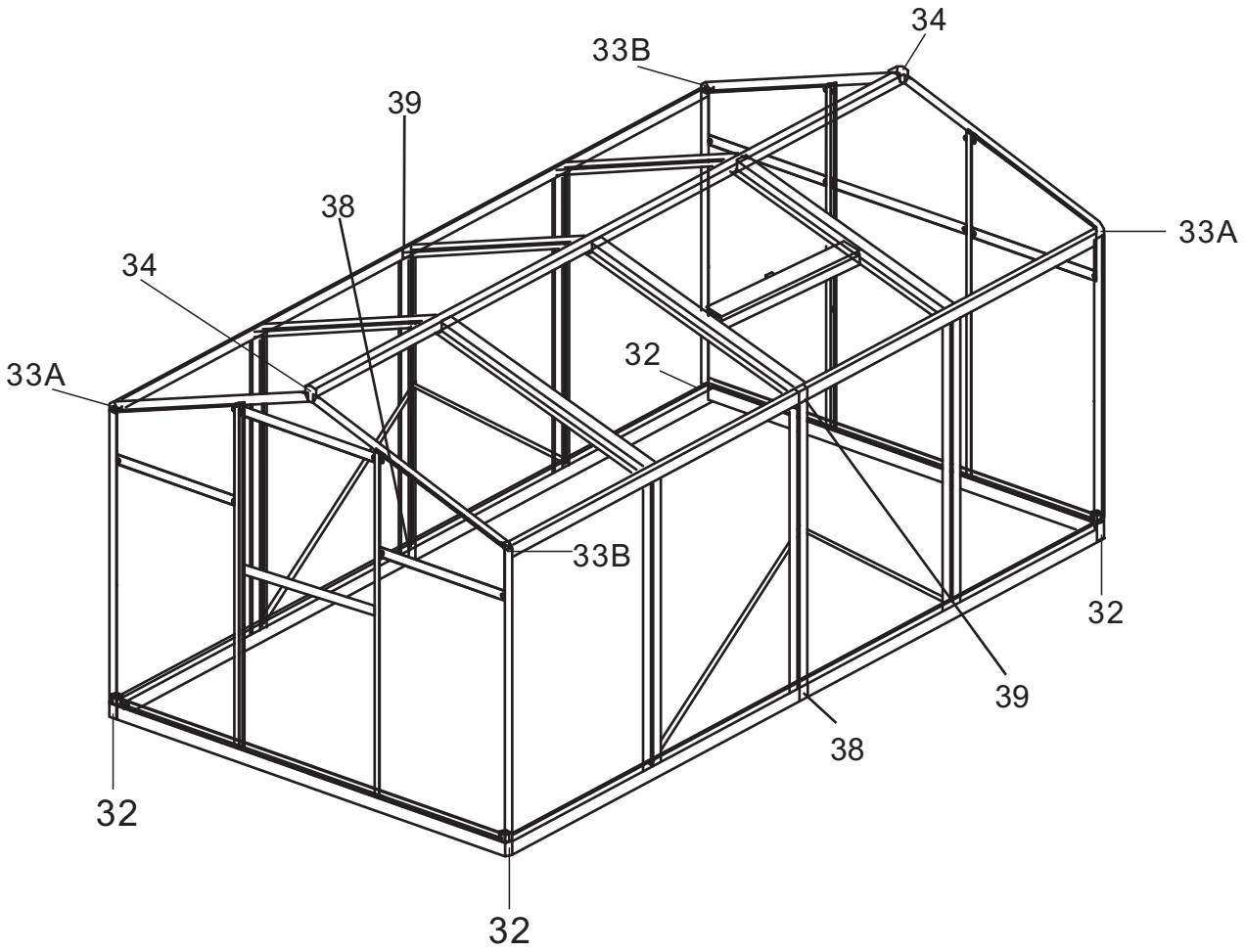
34
33B
39
38
33A
34
32
33A
33B
32
39
38
32
32

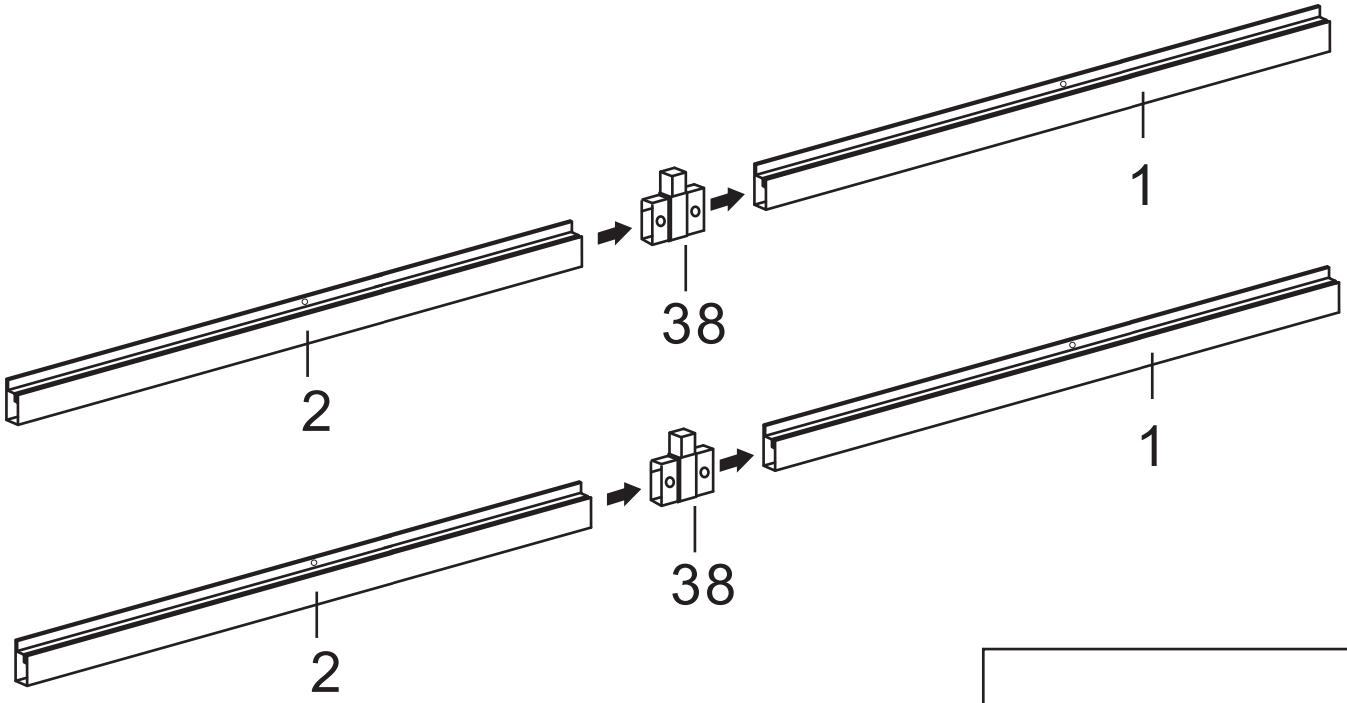

Picture	NO.	Qty.
	1	2
	2	2
	38	2

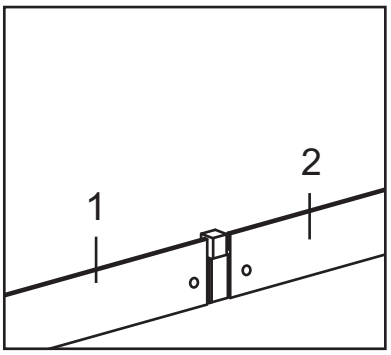

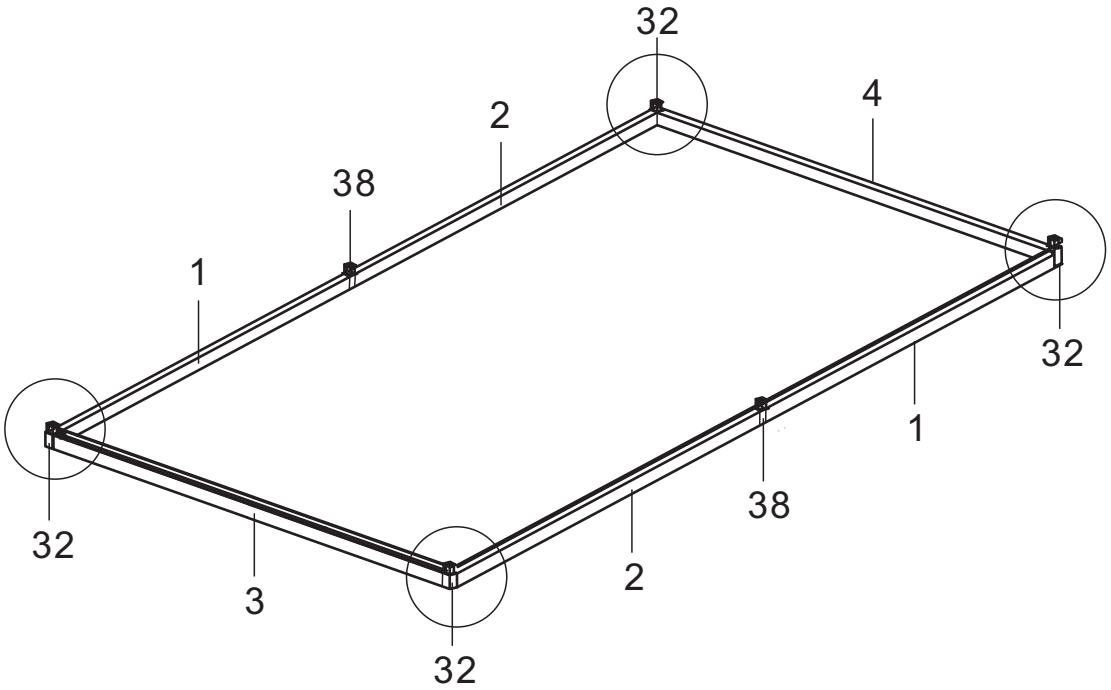

Picture	NO.	Qty.
	3	1
	4	1
	32	4
	42	8

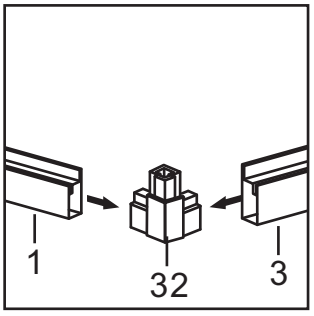

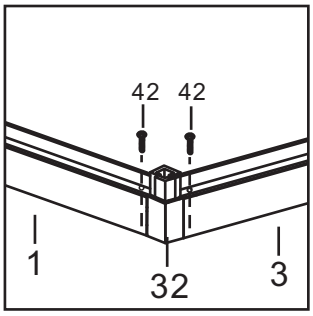

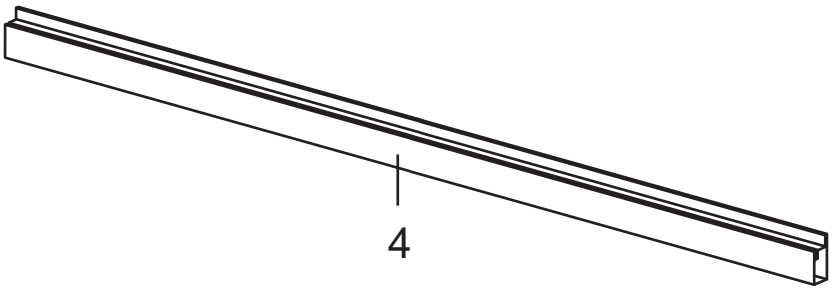

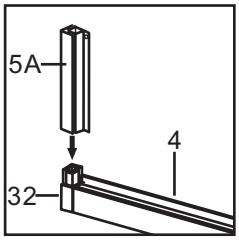

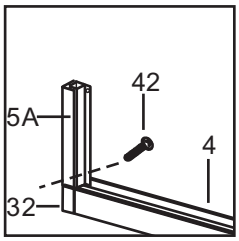

Picture	NO.	Qty.
	5A	1
	5B	1
	42	2

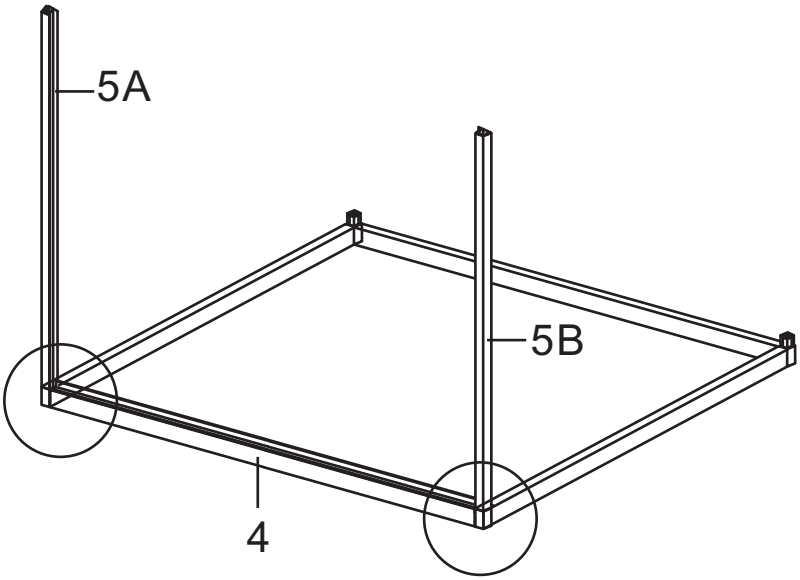

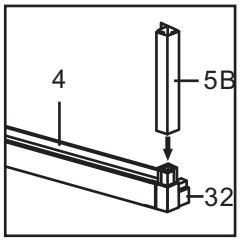

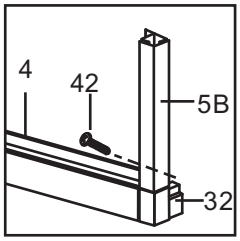

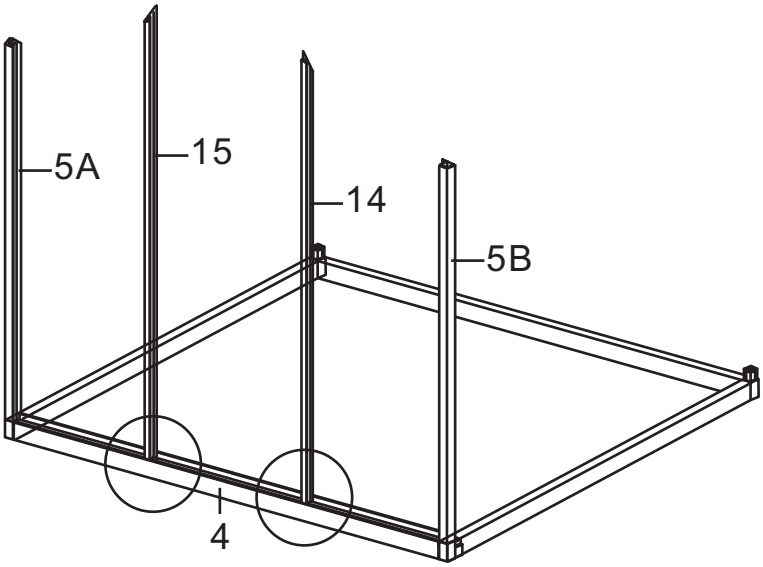

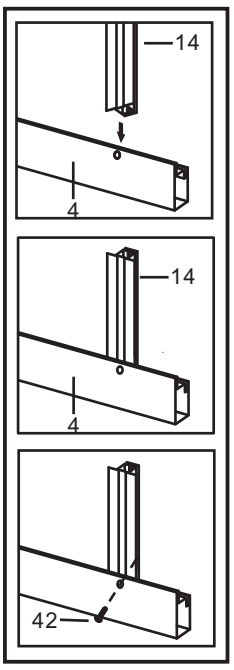

Picture	NO.	Qty.
	14	1
	15	
	42	2

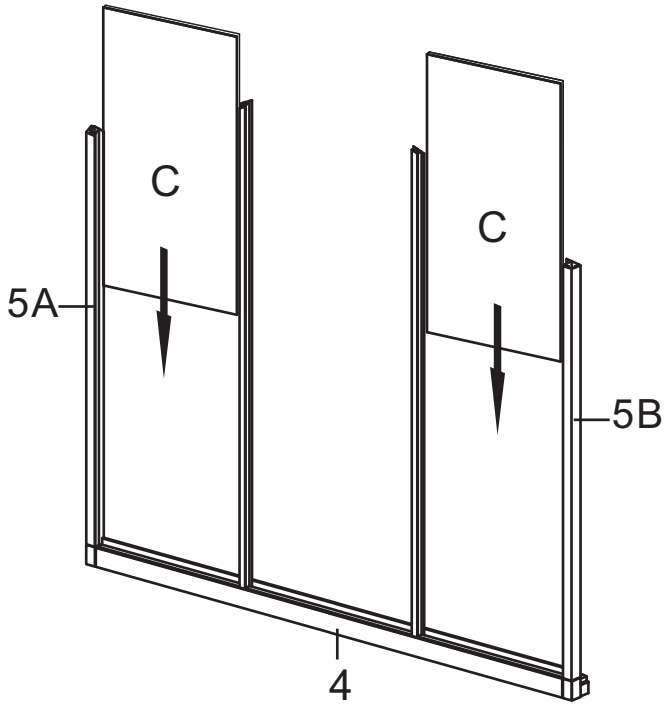

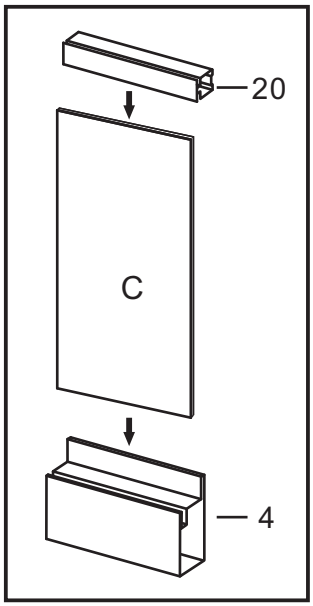

Picture	NO.	Qty.
	C	2
	20	2

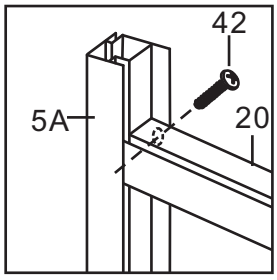

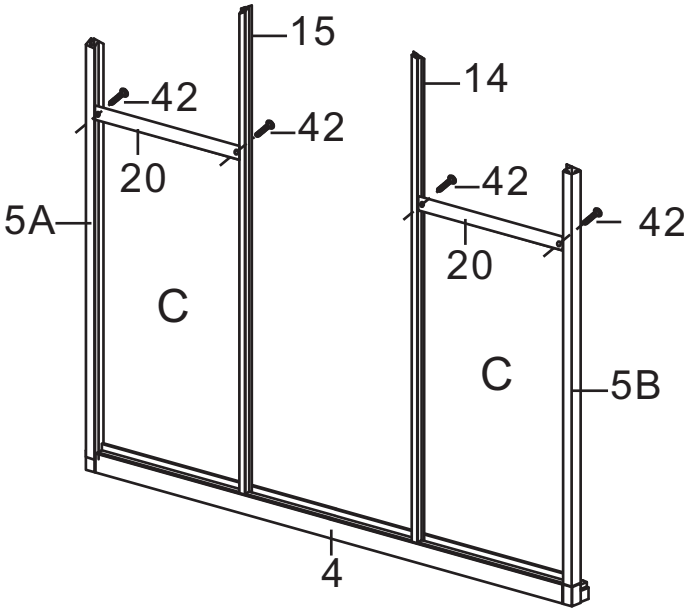

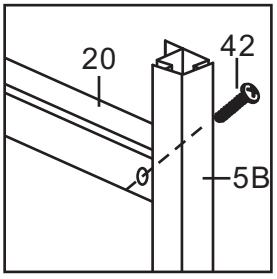

Picture	NO.	Qty.
	42	4

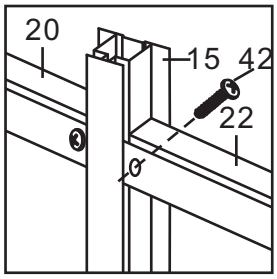

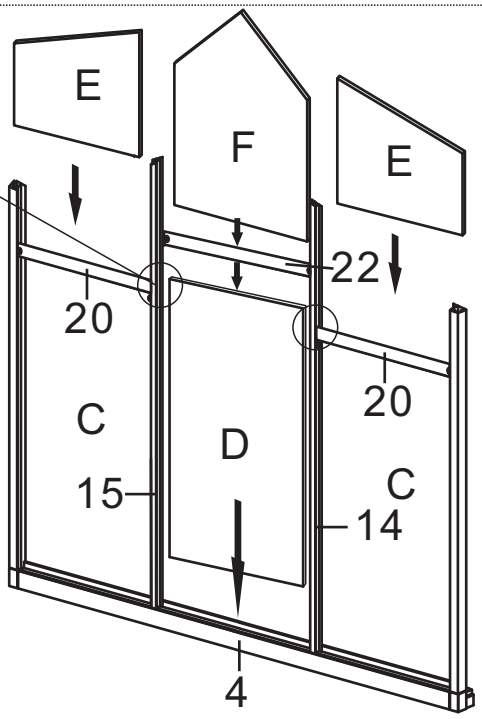

Picture	NO.	Qty.
	D	1
	F	1
	E	2
	22	1
	42	2

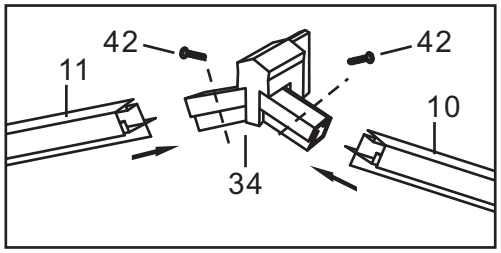

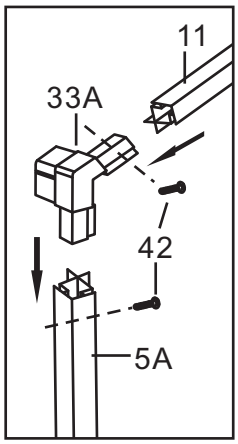

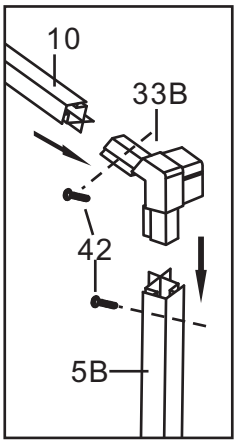

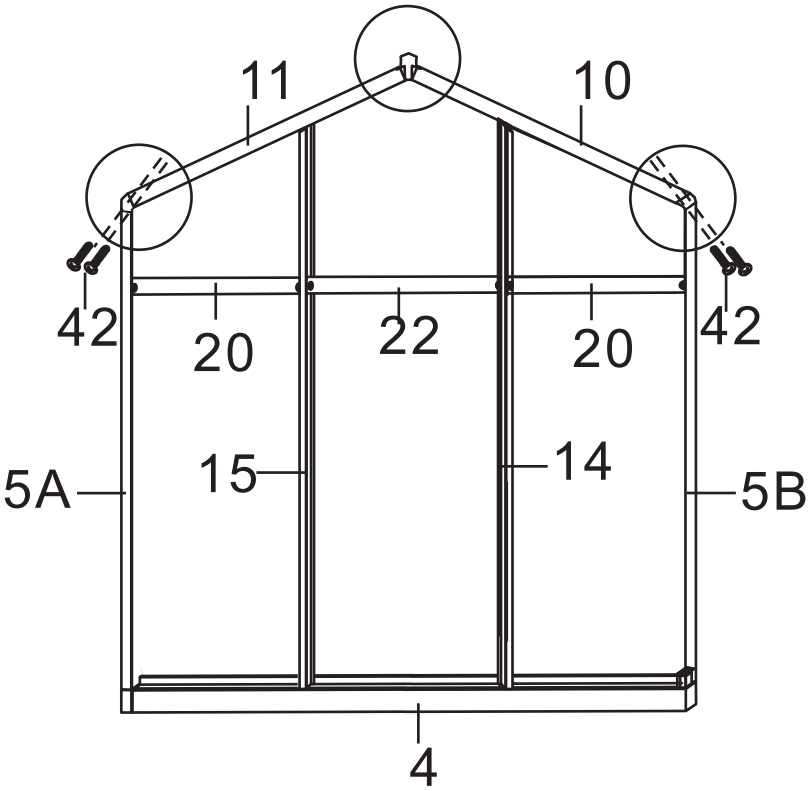

Picture	NO.	Qty.
	10	1
	11	1
	34	1
	33A	1
	33B	1
	42	6

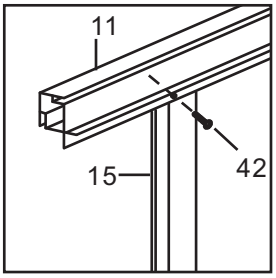

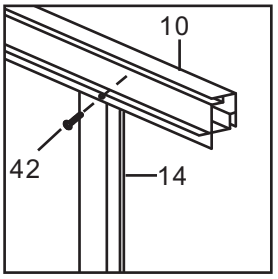

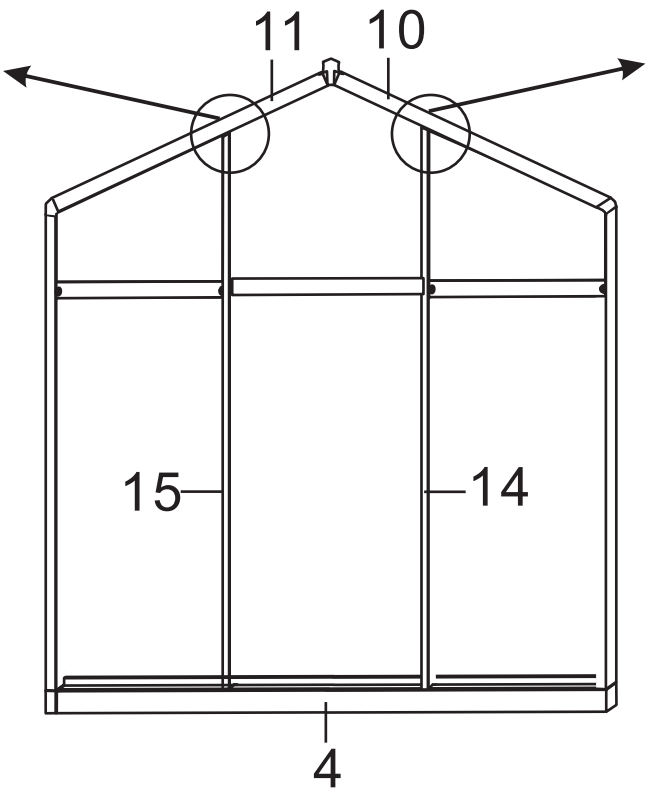

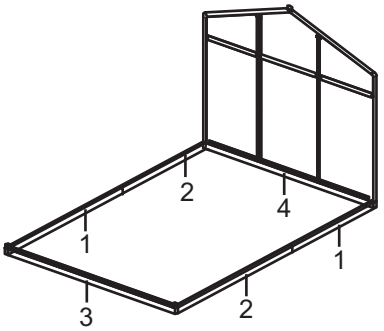

Picture	NO.	Qty.
	42	2

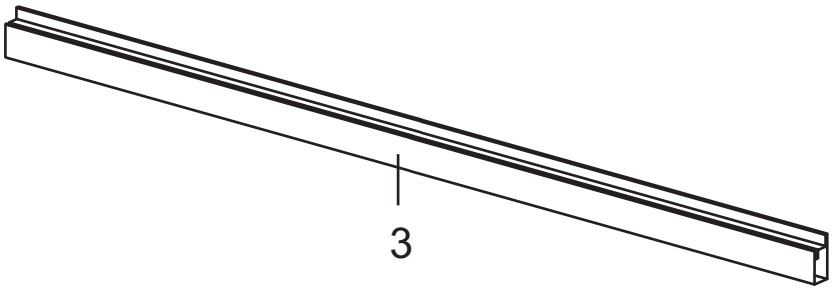

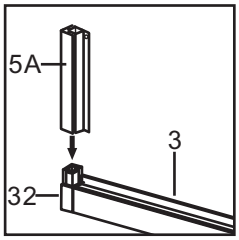

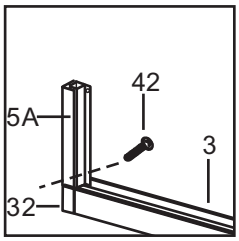

Picture	NO.	Qty.
	5A	1
	5B	1
	42	2

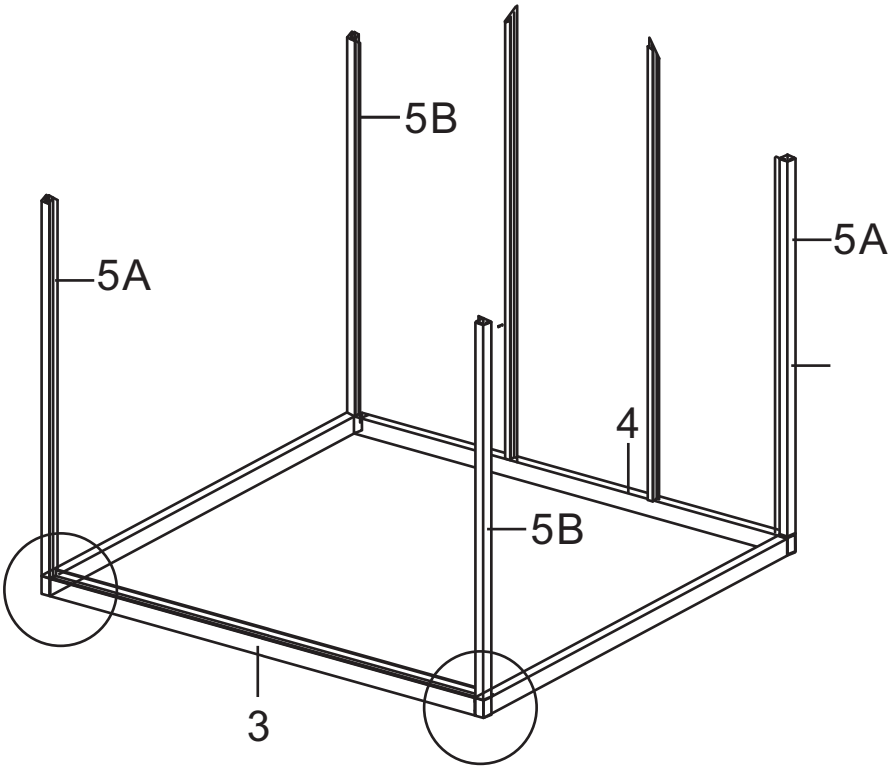

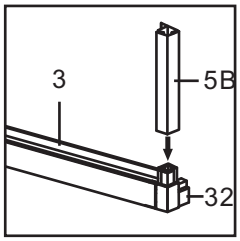

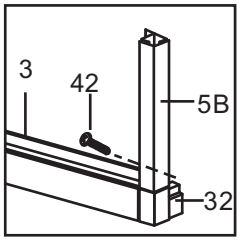

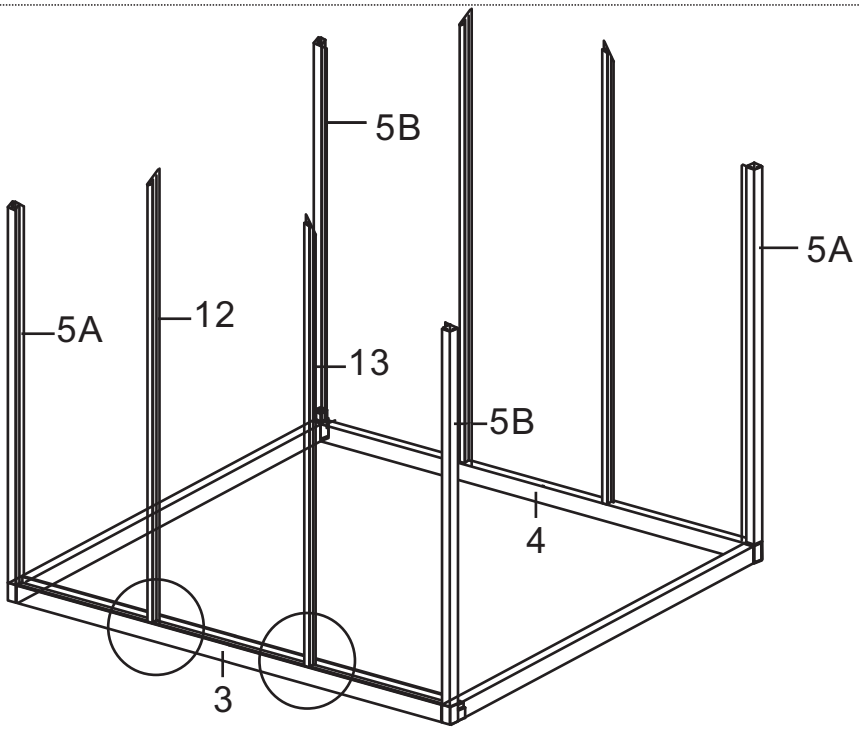

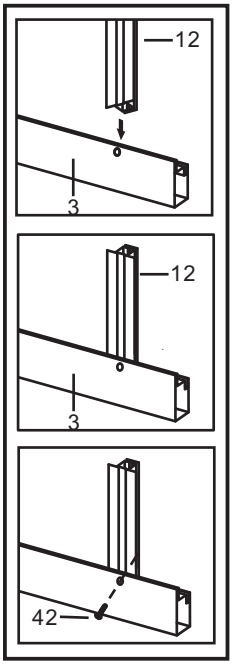

Picture	NO.	Qty.
	12	1
	13	
	42	2

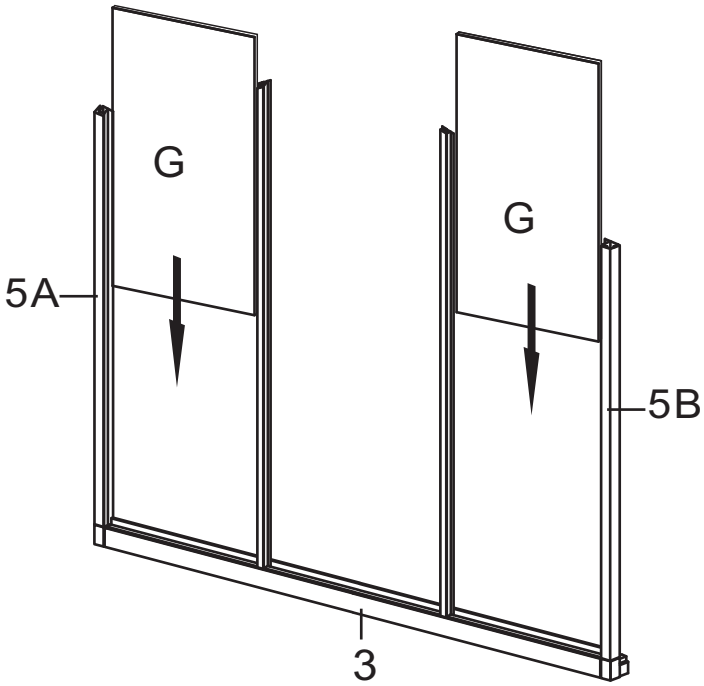

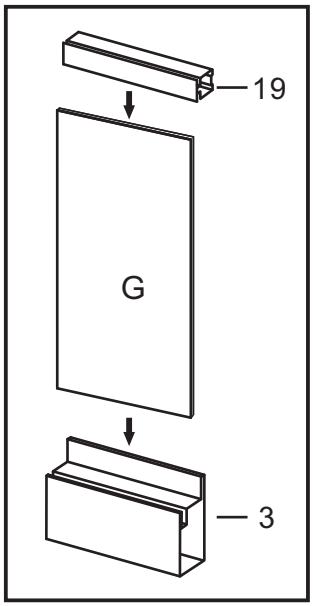

Picture	NO.	Qty.
	G	2
	19	2

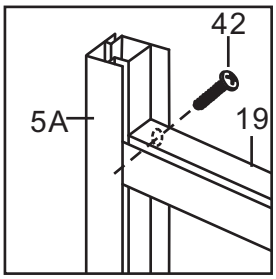

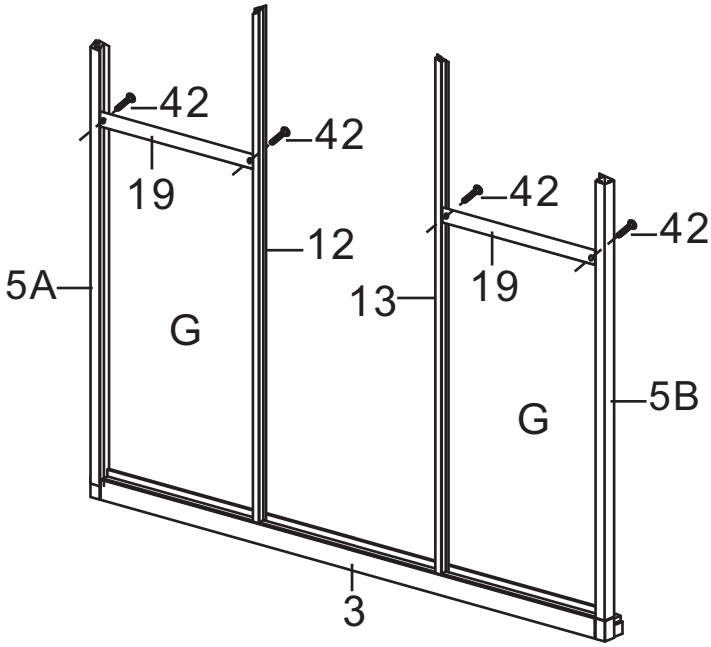

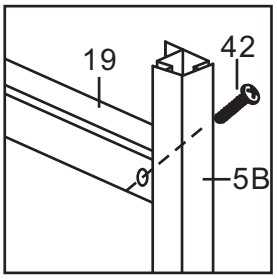

Picture	NO.	Qty.
	42	4

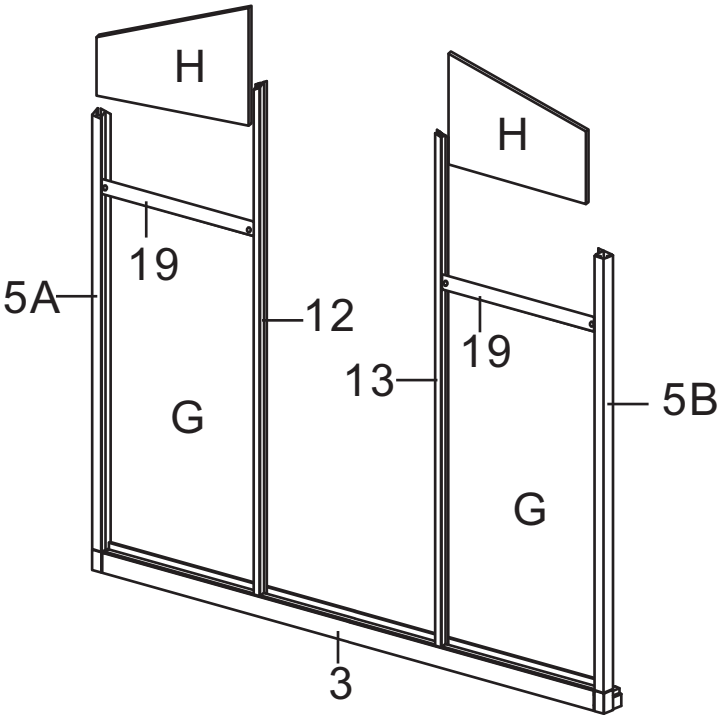

Picture	NO.	Qty.
	H	2

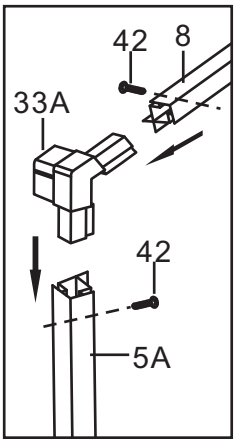

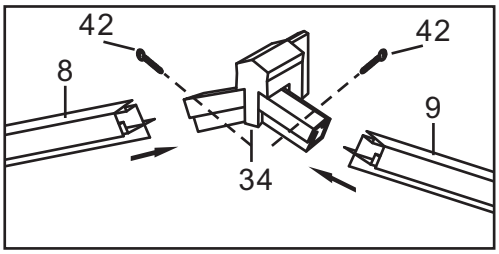

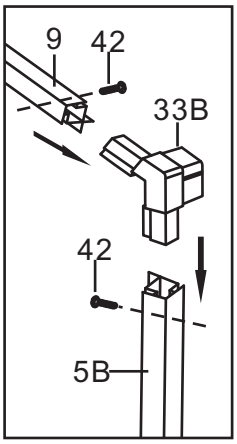

Picture	NO.	Qty.
	8	1
	9	1
	21	1
	33A	1
	33B	1
	34	1
	42	6
	I	1

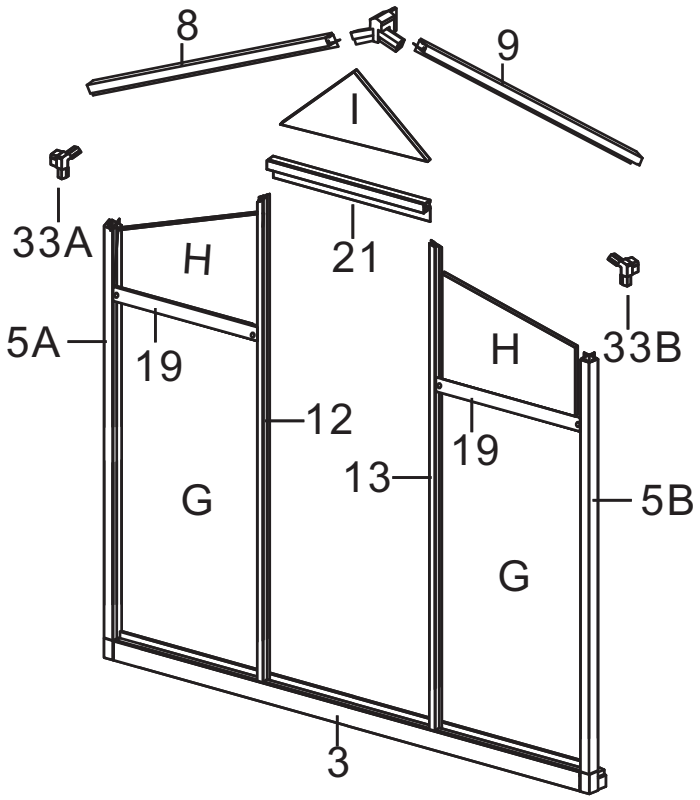

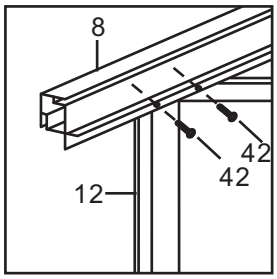

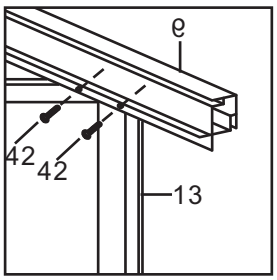

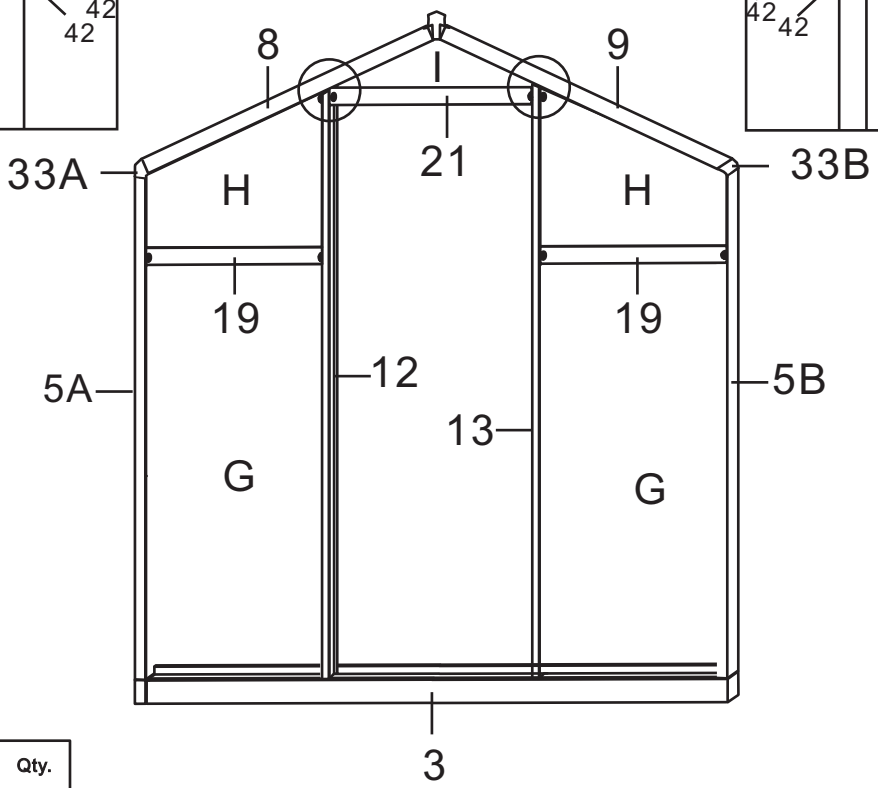

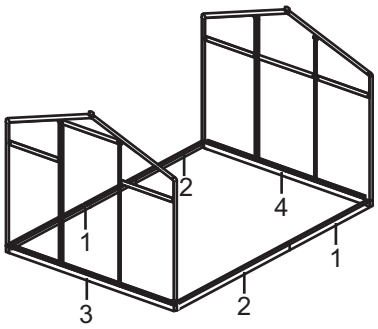

Picture	NO.	Qty.
	42	4

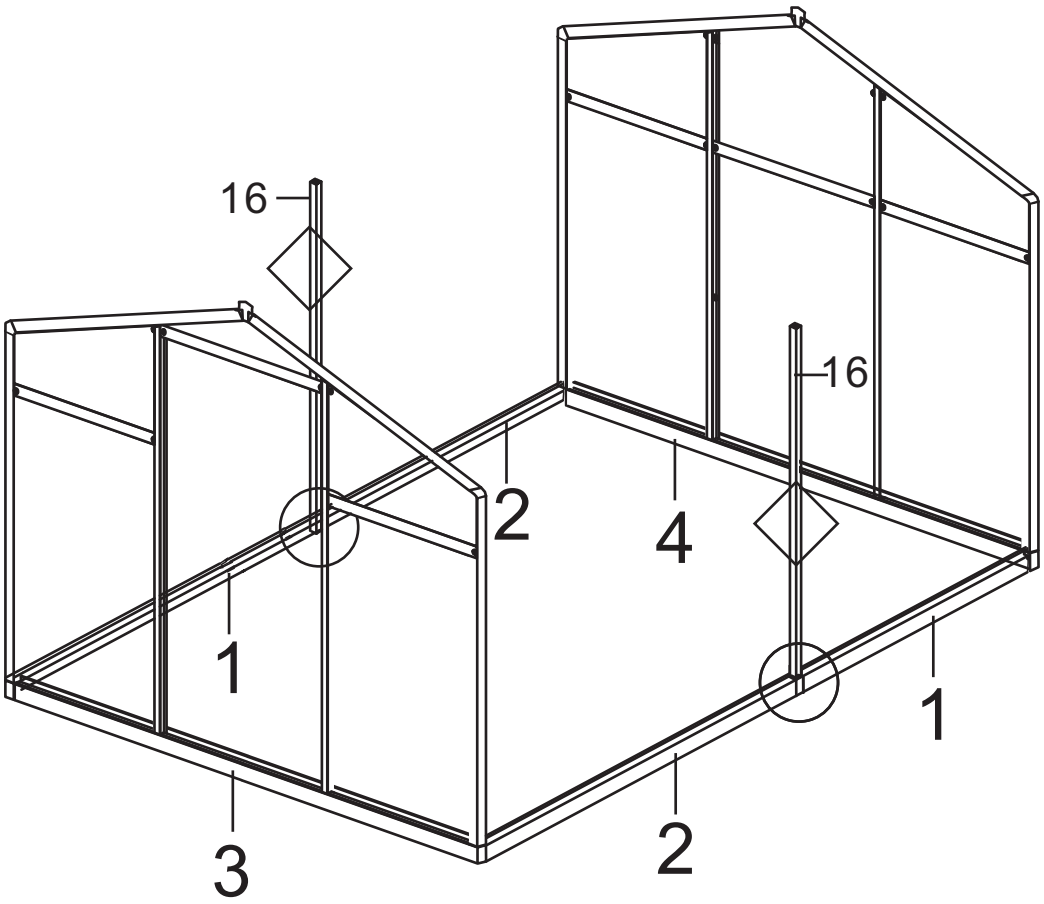

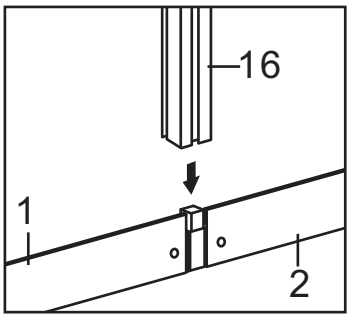

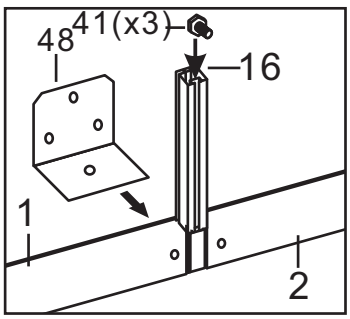

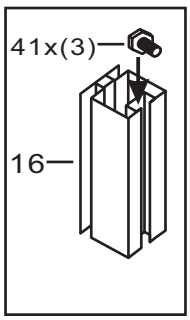

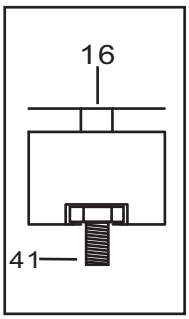

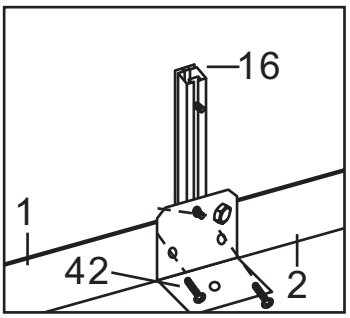

Picture	NO.	Qty.
	16	2
	41	6
	42	4
	48	2

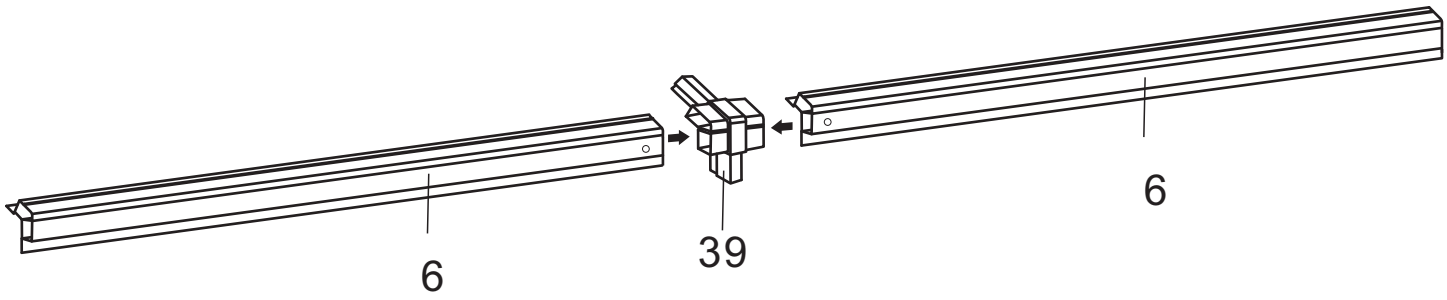

Picture	NO.	Qty.
	6	4
	39	2

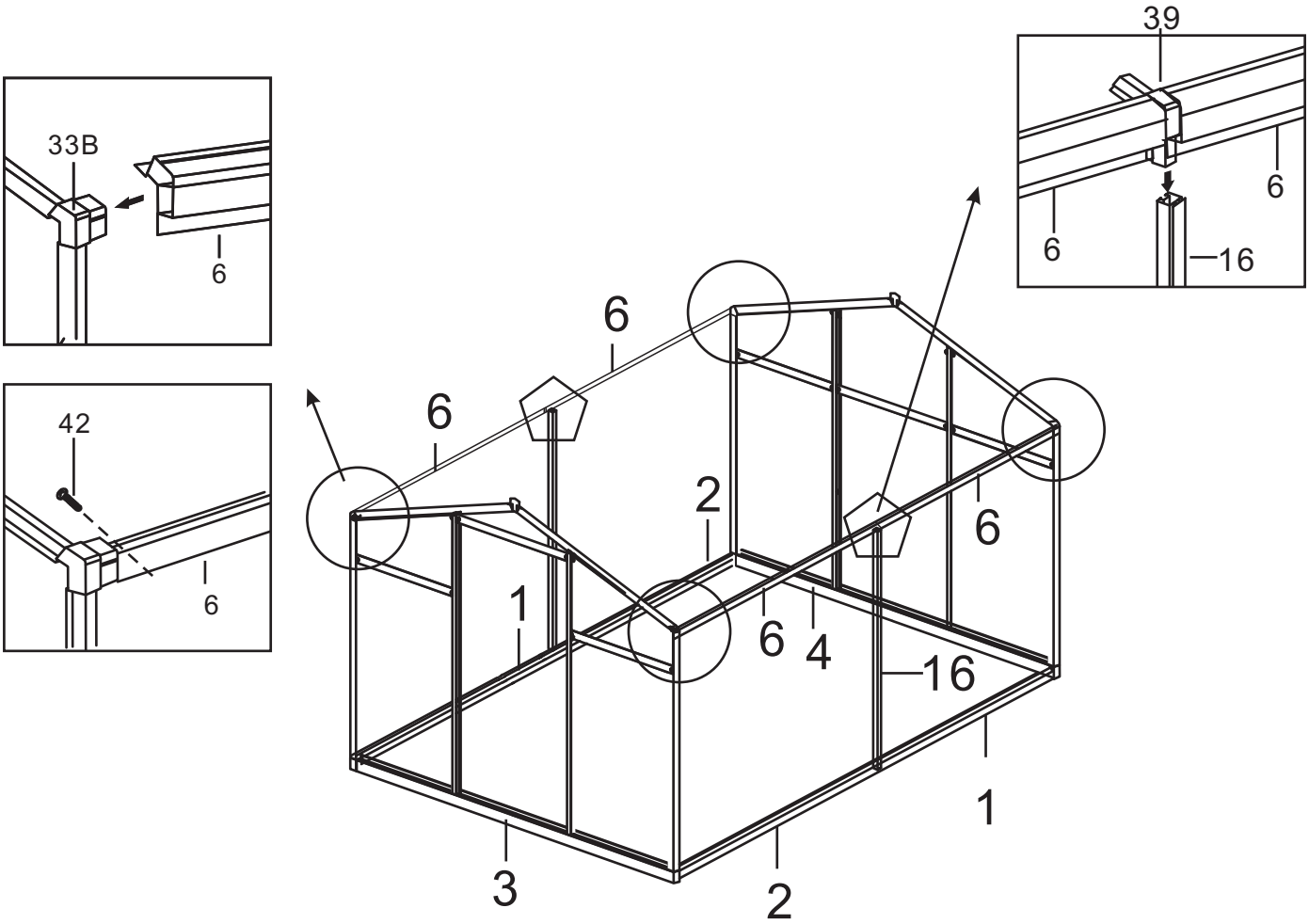

Picture	NO.	Qty.
	42	4

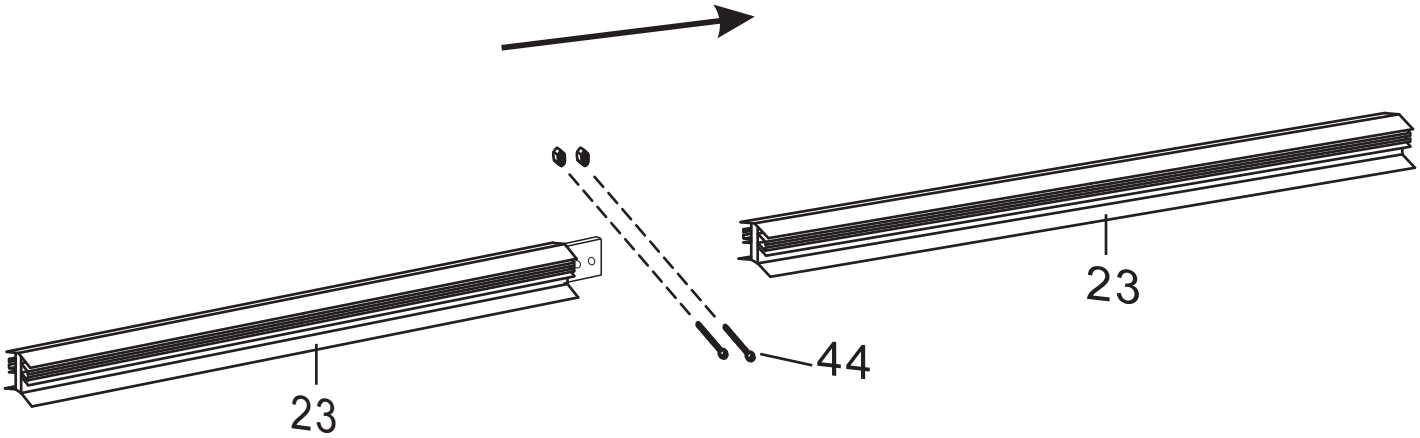

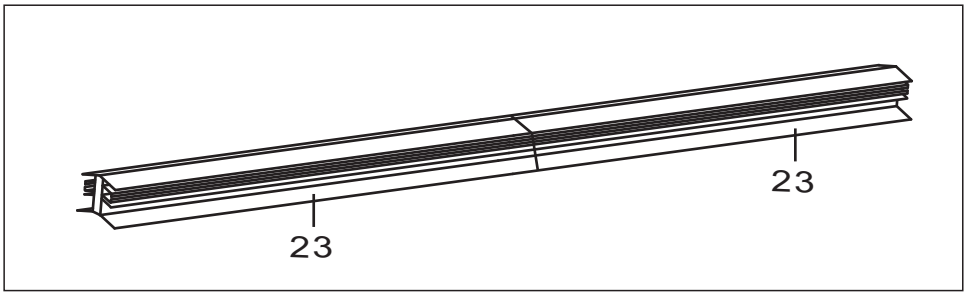

Picture	NO.	Qty.
	23	2
	44	2

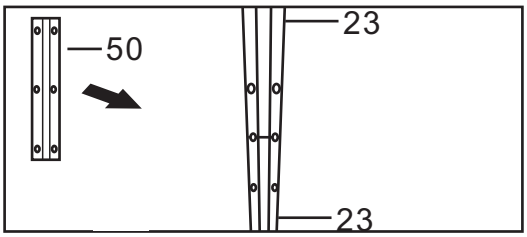

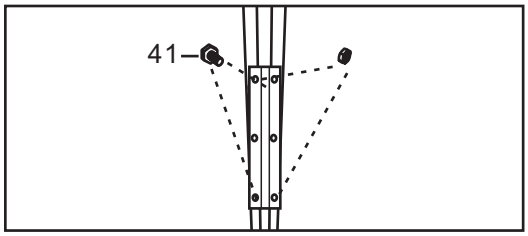

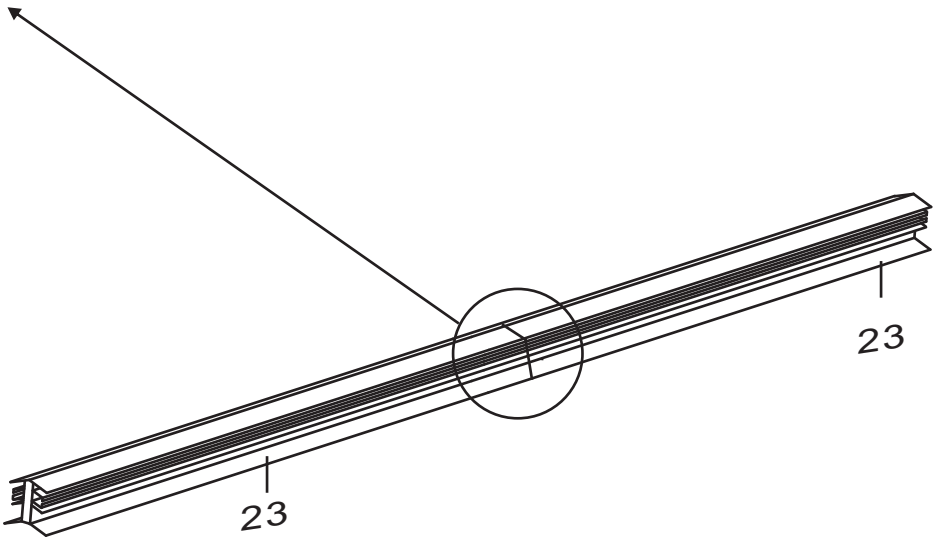

Picture	NO.	Qty.
	50	1
	41	4

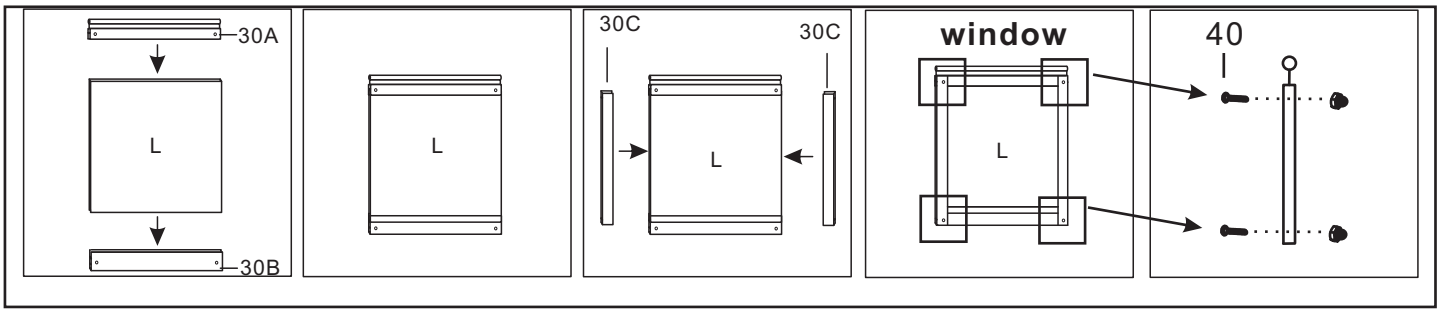

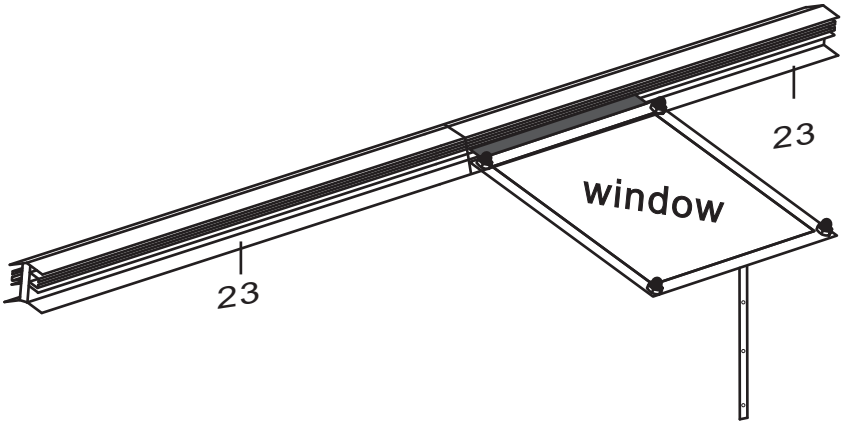

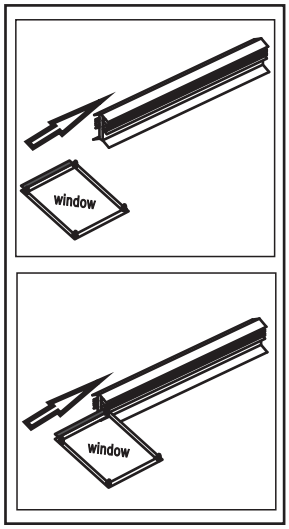

Picture	NO.	Qty.
	30A	1
	30B	1
	30C	2
	L	1
	40	4

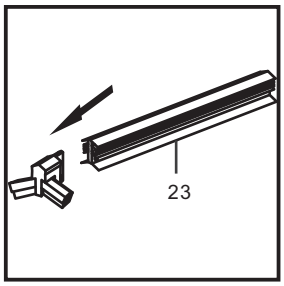

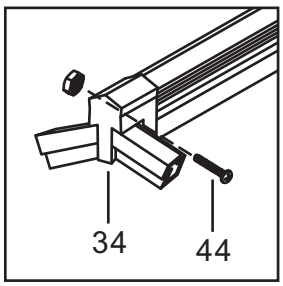

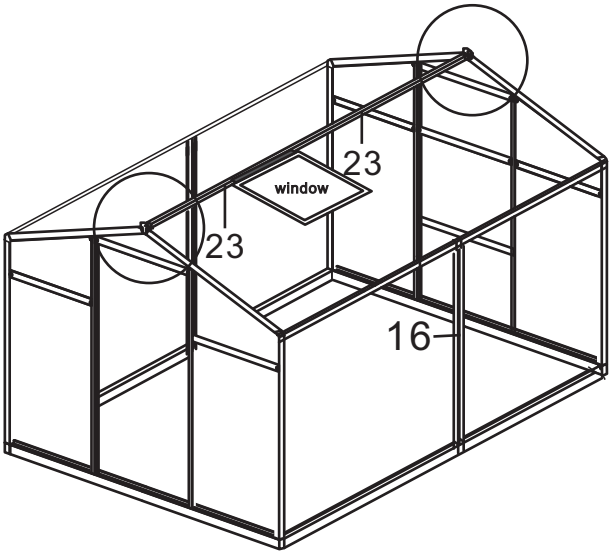

Picture	NO.	Qty.
	44	2

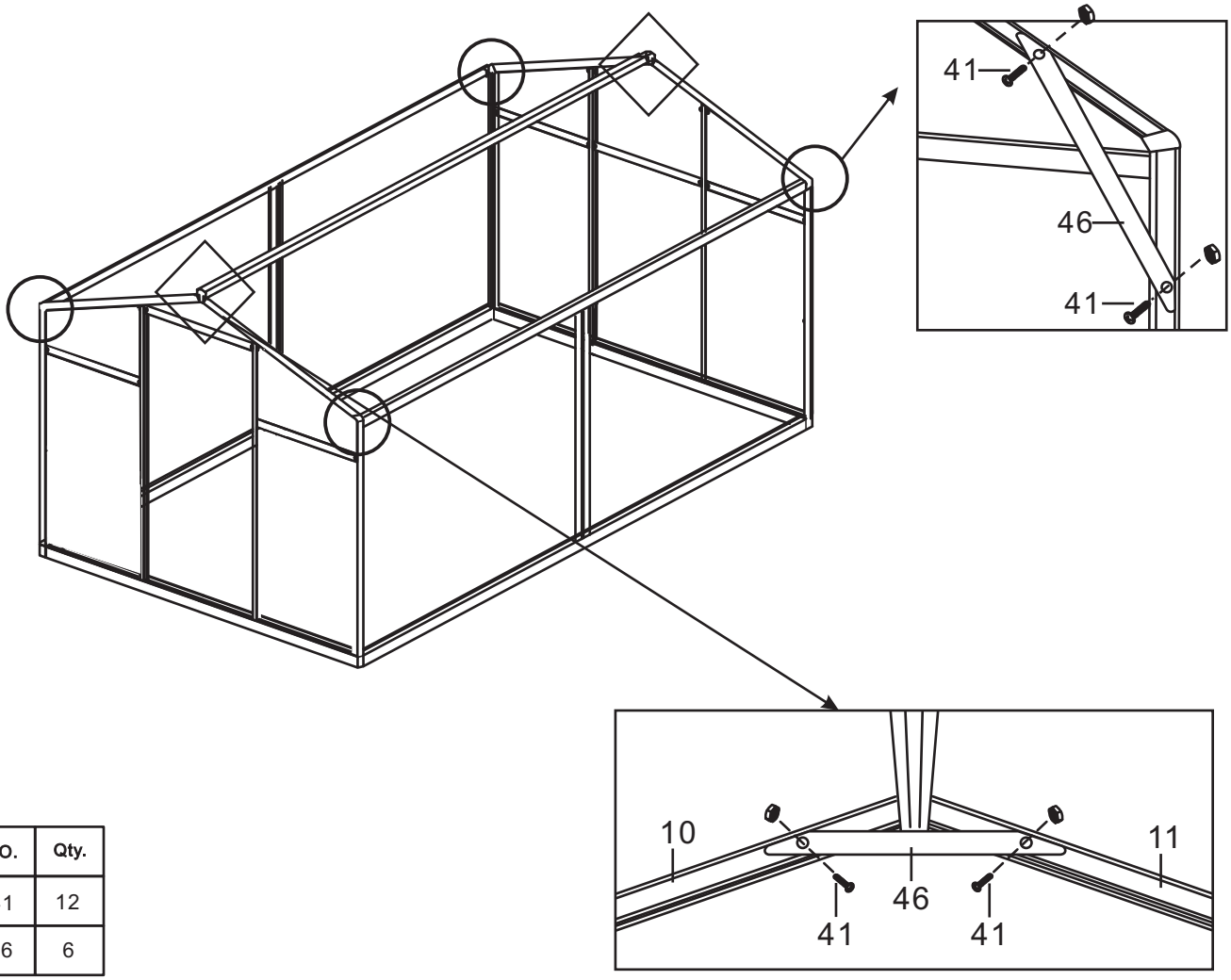

Picture	NO.	Qty.
	41	12
	46	6

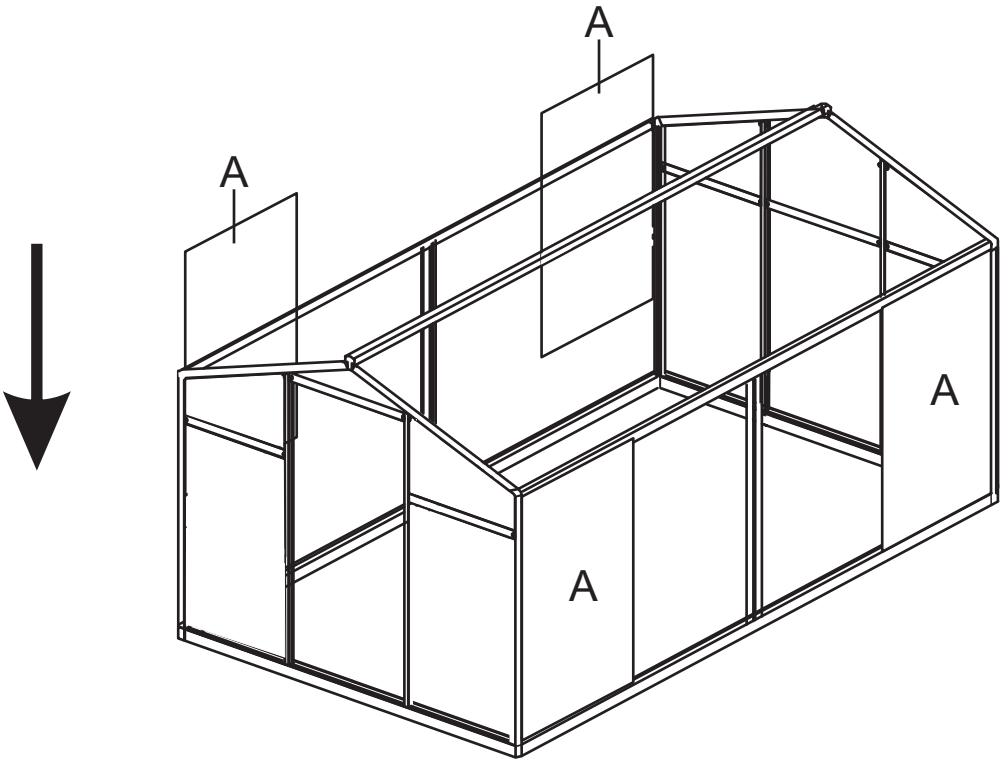

Picture	NO.	Qty.
	A	4

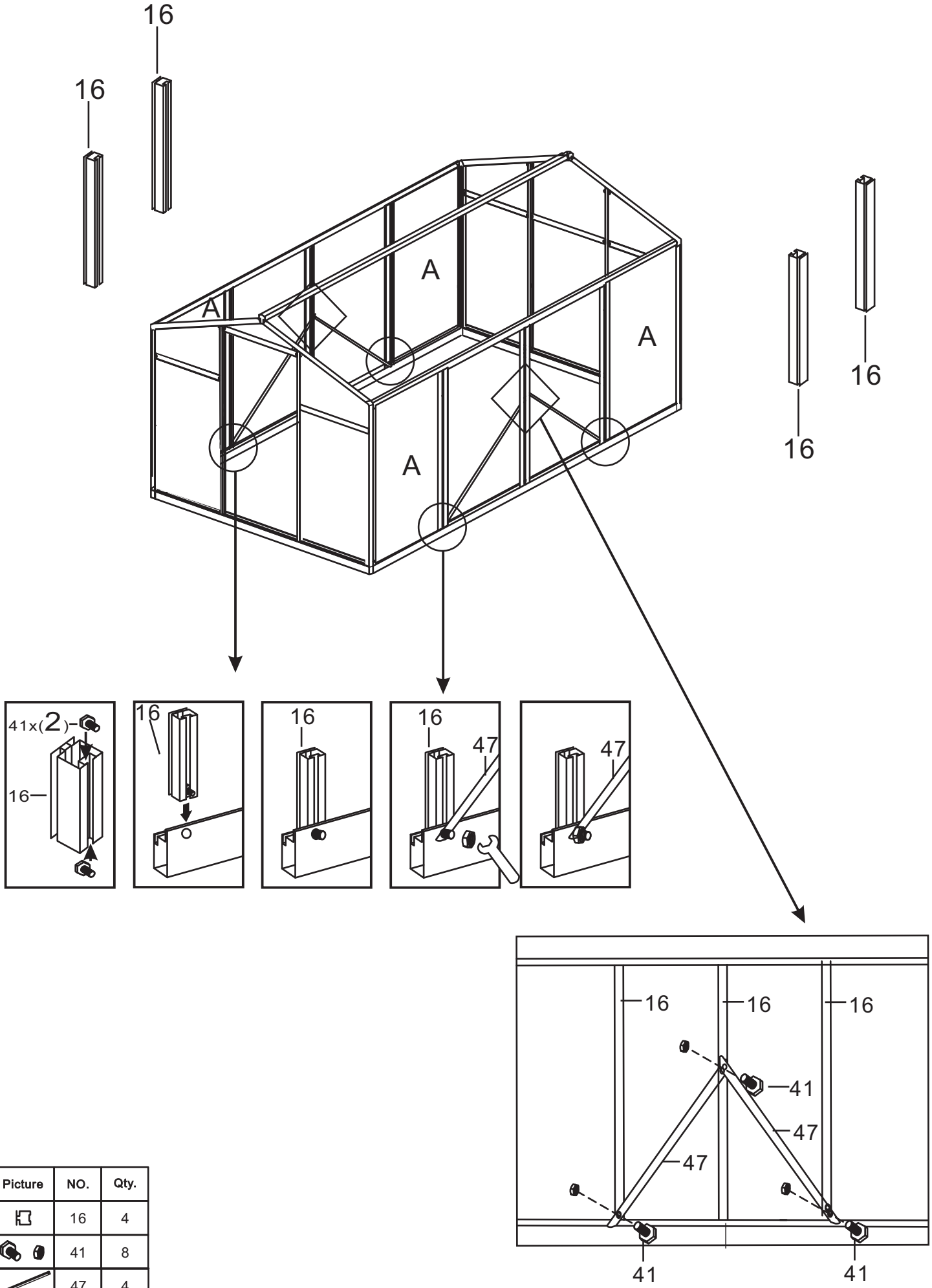

Picture	NO.	Qty.
	16	4
	41	8
	47	4

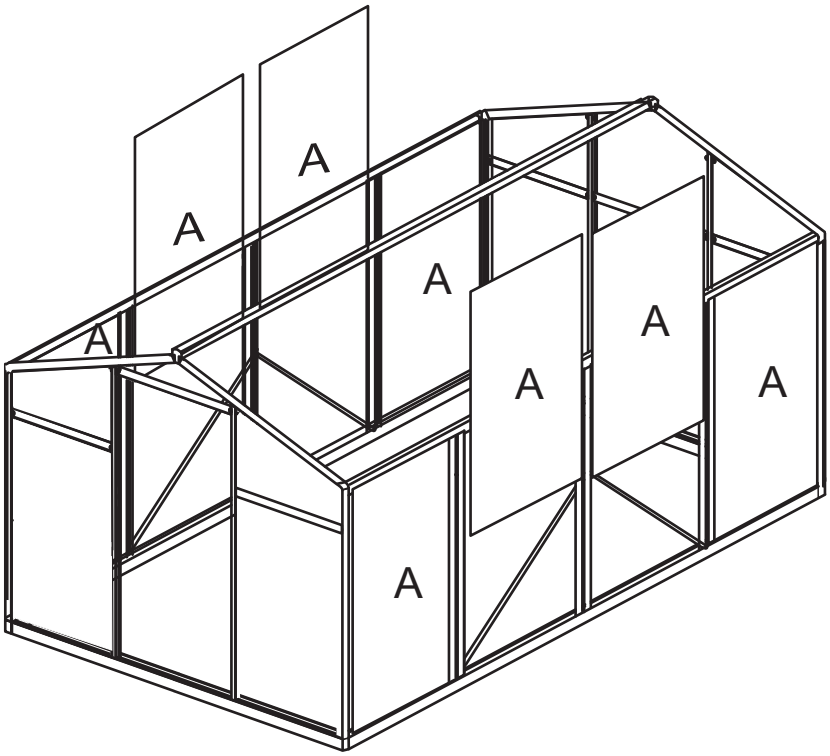

Picture	NO.	Qty.
	A	4

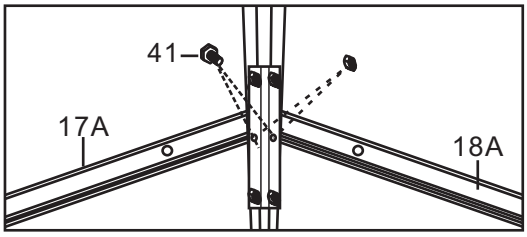

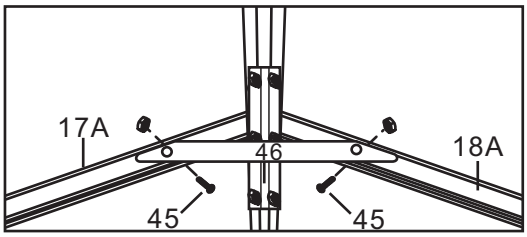

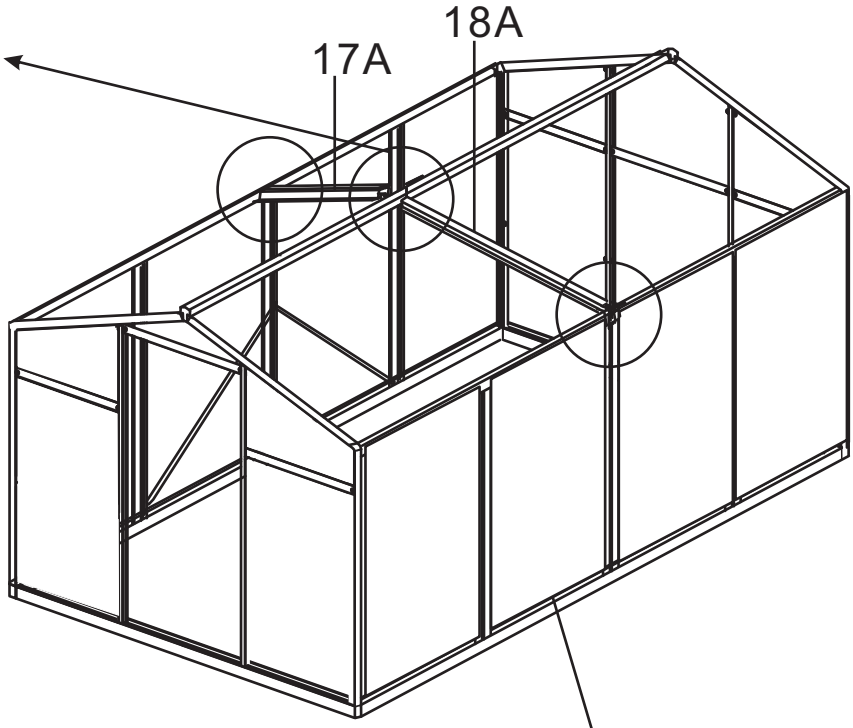

Picture	NO.	Qty.
	17A	1
	18A	1
	41	4
	42	4
	45	2
	46	1
	49	2

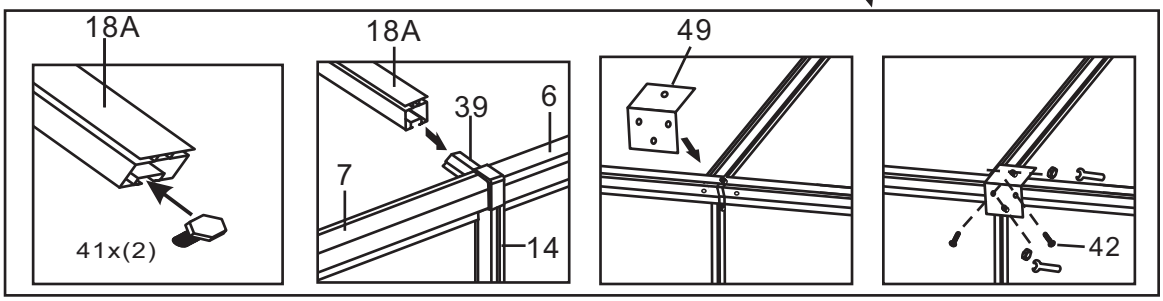

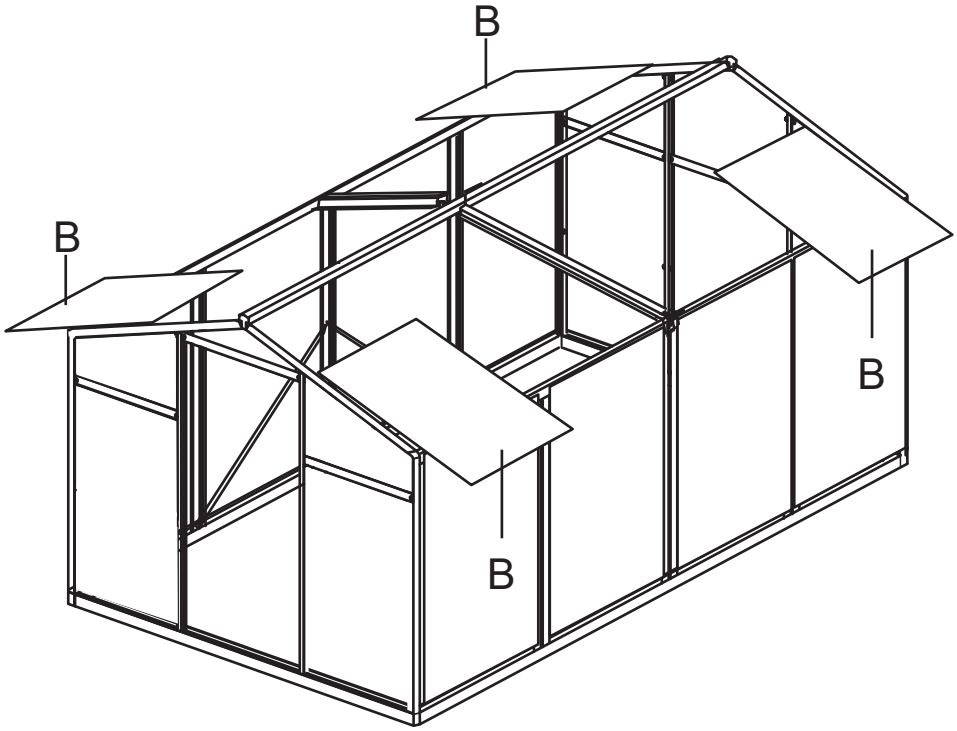

Picture	NO.	Qty.
	B	4

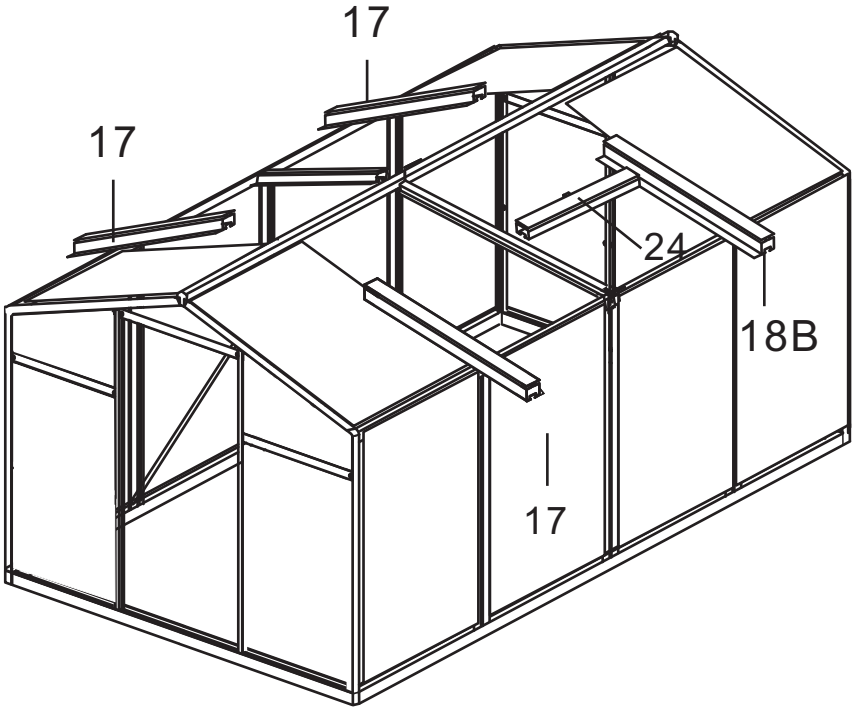

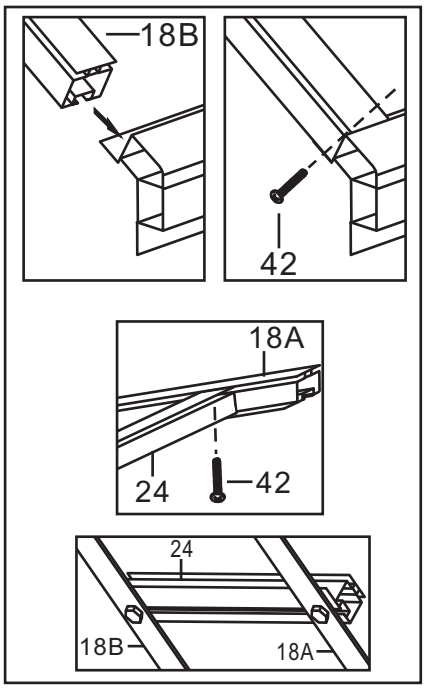

Picture	NO.	Qty.
	17	3
	18B	1
	24	1
	42	10

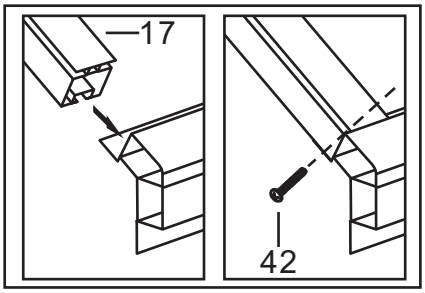

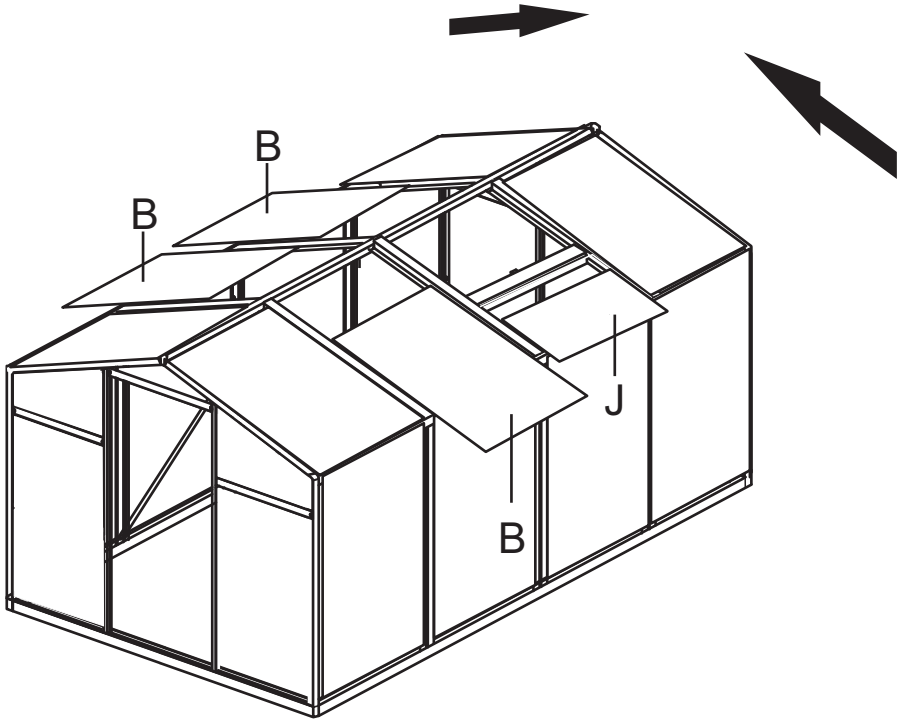

Picture	NO.	Qty.
	B	3
	J	1

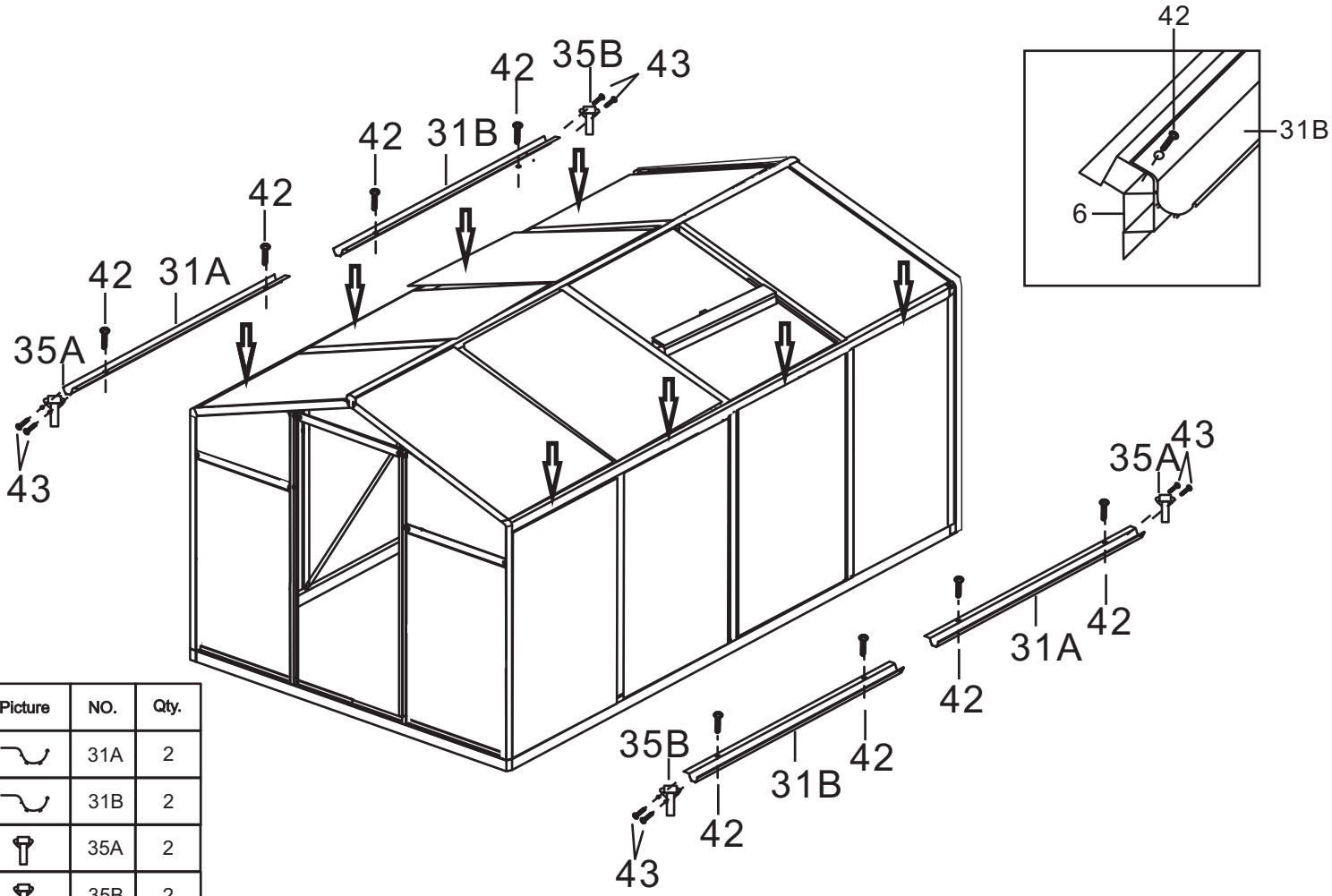

Picture	NO.	Qty.
	31A	2
	31B	2
	35A	2
	35B	2
	42	8
	43	8

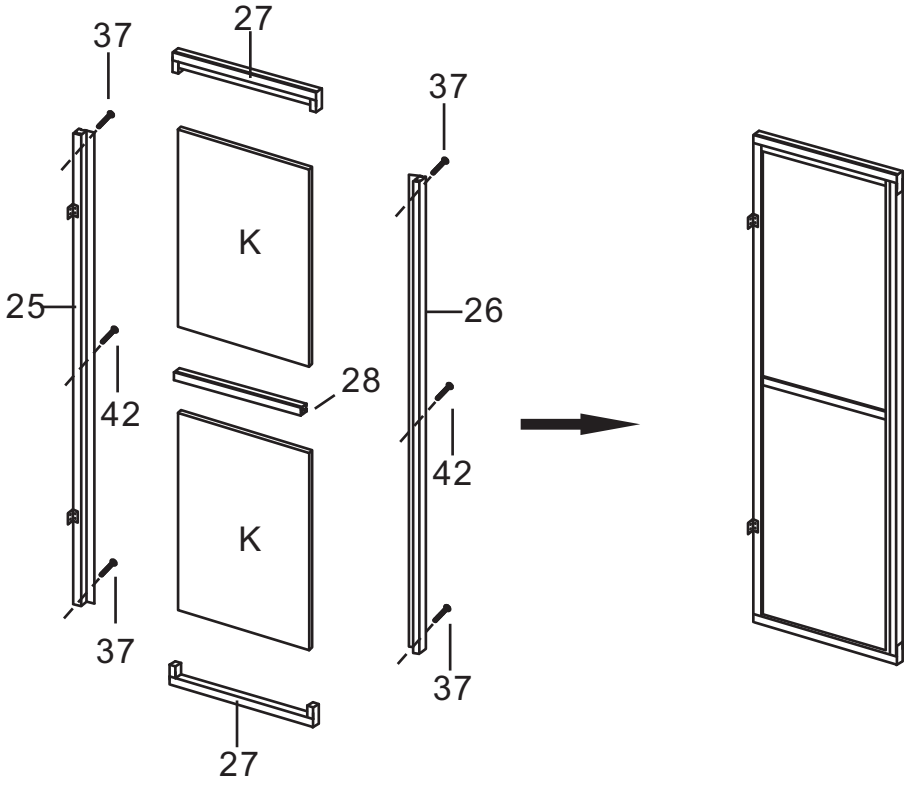

Picture	NO.	Qty.
	25	1
	26	1
	27	2
	28	1
	K	2
	37	4
	42	2

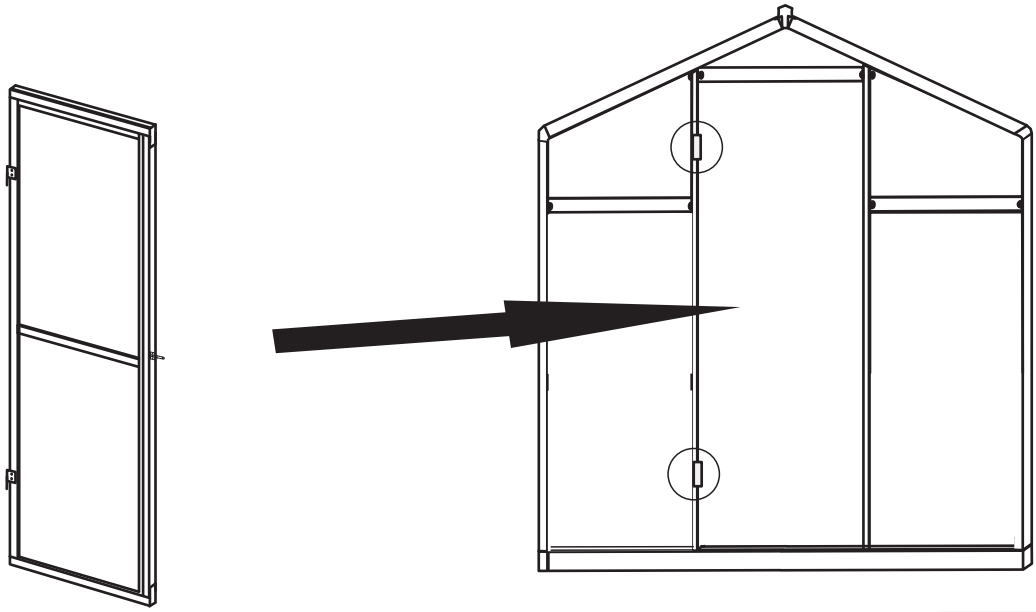

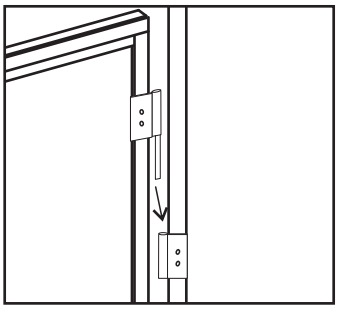

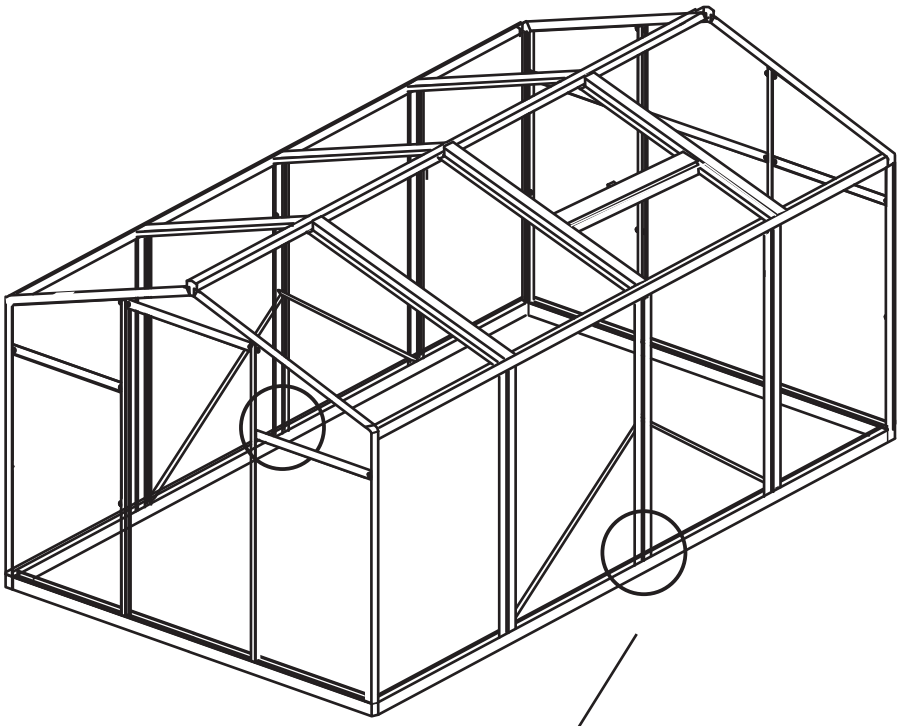

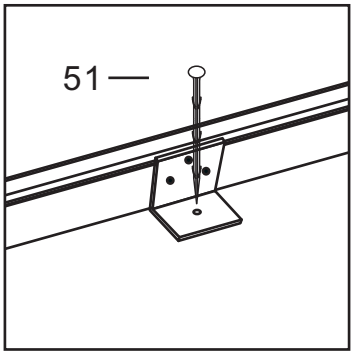

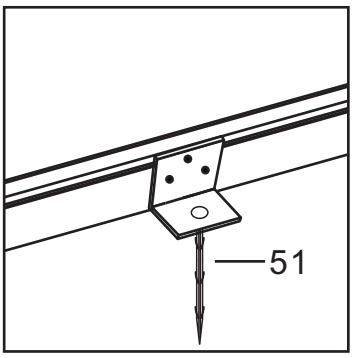

Picture	NO.	Qty.
	51	2